BRONZE & IRON VALVES

LUNKENHEIMER®

THE ONE *Great* NAME IN VALVES

CINCINNATI VALVE COMPANY

LICENSEE OF LUNKENHEIMER VALVES

INDEX

LUNKENHEIMER®
THE ONE Great NAME IN VALVES

CINCINNATI VALVE COMPANY
LICENSEE OF LUNKENHEIMER VALVES

P.O. BOX 141451 . CINCINNATI, OH 45250-1451 . U.S.A.
PHONE: 513-471-8258 . FAX: 513-471-8327

Lunkenheimer Bronze & Iron Valves have been recognized since 1862 for their quality and dependability. And this famous LUNKENHEIMER QUALITY continues to be available in the same, unchanged products that have provided you, our customers, with the lowest installed cost, increased productivity and uptime.

Most of the Lunkenheimer Valves are manufactured in the traditional Cincinnati Ohio Foundry and Plant. They are MADE IN U.S.A.!

Through continuous manufacturing improvements, Lunkenheimer Valves are now very competitive, especially when compared on the installed cost basis. This because of our world-sourcing of raw materials, components and in some sizes and figures of our complete units, per our design, depending upon best available costs, here or there. Call us for exact information about where we manufacture each of our valves. We want you to know and feel confident!

As from our beginning, Lunkenheimer Valves are sold through SELECTIVE DISTRIBUTION, and we are proud of the fact that most of our Distributors have sold Lunkenheimer Products for from 35 to over 90 years! Their Knowledgeable sales and service personnel has our full trust and support in serving you, our valued CUSTOMER!

For the name of your nearest Stocking Distributor of Lunkenheimer Quality BRONZE & IRON VALVES, SPECIALTIES, KING CLIPS, BALL VALVES, BUTTERFLY VALVES and OTHER PRODUCTS, phone 513-471-8258, FAX 513-471-8327 or write to P.O.Box 141451, CINCINNATI, OHIO 45250-1451, U.S.A.

LUNKENHEIMER®
THE ONE Great NAME IN VALVES

CINCINNATI VALVE COMPANY
LICENSEE OF LUNKENHEIMER VALVES

P.O. BOX 141451 . CINCINNATI, OH 45250-1451 . U.S.A.
PHONE: 513-471-8258 . FAX: 513-471-8327

Class

125

Lunkenheimer Bronze Gate Valves

125 lb SP
200 lb WOG
Screw-in bonnet, Screw end

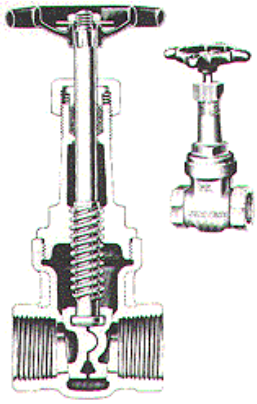

Rising stem
Uni-ball disc
Fig 2125

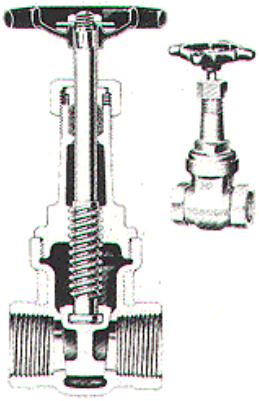

Rising stem
Solid wedge disc
Fig 2127

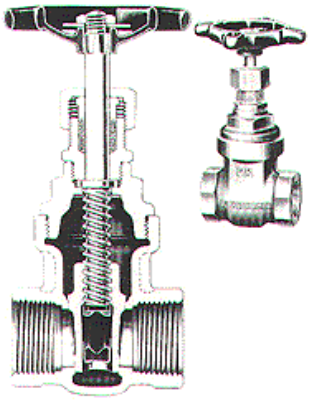

Non-rising stem
Single wedge disc
Fig 2129

Bronze bonnet gate valves are designed for steam, water, gas, oil and other general services. Valves are similar except for screw or solder pipe ends. Rising stems are specified where stem position is used for visually determining whether the valve is open or closed. Non-rising stems are used where headroom is limited. Valves are designed for maximum interchangeability of parts to reduce spare parts inventories.

Bodies Full flow design. Connecting pipe ends will not distort valve seats. Same body is used for both rising and non-rising stem valves insuring interchangeability of trims. Disc guide channels are beveled at top of body for easy assembly.

Bonnets Heavy screw-in bonnet collar with ample thread engagement insures a tight body collar joint. Wide flats provide a firm wrench hold for disassembling valve.

Stems Resistant to wear, corrosion and embrittlement. Long, accurately machined threads provide full thread contact. Heavy disc-stem connection withstands wearing action when opening valve and prevents stem failure under strain. Rising stems have a backseat surface above the stem threads where it is less exposed to scale and damage from line debris.

Discs for rising stems Two types: Double wedge discs (Uni-ball construction). Consist of two separate disc faces with an integral ball and socket connection between them; faces readily adjust to body seat taper, insuring tight closure. Sturdy disc collar strengthens disc-stem connection. Easy to assemble and with valve wide open the discs are drawn up into the bonnet and cannot drop off stem. Wing guides mate with channels in the body to hold the halves together and guide them during opening and closing.

Solid wedge discs Accurately machined with disc-wing guides that conduct the disc to a firm, tight seat. Ideal for food processing lines and handling gummy substances where entrapment of line materials within the disc is undesirable.

Discs for non-rising stems Single wedge discs are threaded to engage with thread on stem, raising or lowering disc as stem is turned. Threads are long enough to be fully engaged whether valve is open or closed. Disc has wing guides which mate with channels in the body.

Seats Integral. Accurately tapered to insure perfect seating of the discs.

Repacking Valves are repackable under pressure when wide open. Deep stuffing box and packing nut insure firm thread engagement when fully packed. Back seats above stem threads make scale formation unlikely and provide a tight seal.

Hexagon head gland Permits the use of a light wrench to easily loosen and raise gland.

Non-slip handwheel Insures tight closing.

Principal Parts and Materials

Part	Fig	Material	ASTM
Body & Bonnet	All	T-1 Bronze	B62
Disc	All	T-1 Bronze	B62
Stem	All	Stemalloy, Cast (C87500)	B371
Packing	All	JC 168 Kevlar	–

These valves comply with ANSI B16.24 and MSS-SP 80

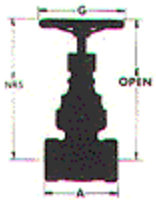

Dimensions in inches Weights in Pounds

Size	¼	3/8	½	¾	1	1 ¼	1 ½	2	2 ½	3
A	1 7/8	2	2 3/16	2 ½	2 13/16	3 3/16	3 3/8	3 11/16	4 11/16	5 ¼
E	4 9/16	4 9/16	5 5/16	6 5/8	7 7/8	9 1/8	10 7/16	12 ¾	15 1/16	17 5/16
F NRS	3 5/8	3 5/8	4 3/16	5	5 ¾	6 7/16	7¼	8 5/8	9 13/16	11 1/16
G	2 ¼	2 ¼	2 ½	3	3 ½	4 1/8	4 5/8	5 1/8	5 ½	6
Fig 2125 Wts	.8	.9	1.3	2.0	3.0	4.3	6.0	9.4	15.0	22.0
Fig 2127 Wts	.8	.9	1.2	2.0	2.9	4.2	6.1	9.8	15.0	22.0
Fig 2129 Wts	.8	.8	1.2	1.9	2.7	3.9	5.6	8.6	13.5	20.0

LUNKENHEIMER®
THE ONE Great NAME IN VALVES

CINCINNATI VALVE COMPANY
LICENSEE OF LUNKENHEIMER VALVES

P.O. BOX 141451 . CINCINNATI, OH 45250-1451 . U.S.A.
PHONE: 513-471-8258 . FAX: 513-471-8327

Class

125

Lunkenheimer Bronze Gate Valves

125 lb SP
200 lb WOG
Union bonnet, Screw end

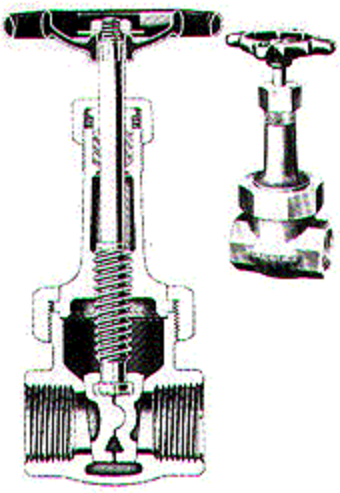

Rising stem
Uni-ball disc
Fig 3125

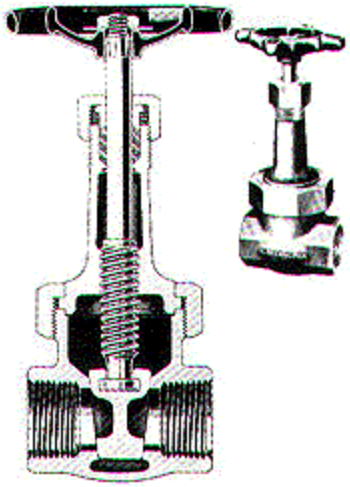

Rising stem
Solid wedge disc
Fig 3127

Union bonnet valves provide strong, safe reliable service in industrial applications. The bonnet is centered by a lip extended into the neck of the valve, securely held in place so that it cannot be accidentally backed out of position.

Bonnets Union Design Heavy bonnets rings are octagonal to provide a firm wrench hold and increase strength.

Bodies Full, cylindrical body minimizes distortion. Octagonal pipe ends. Diaphragm configuration practically eliminates distortion of diaphragms by pipe ends. Disc guide channels are beveled at top of body for easy assembly.

Stems Resistant to wear, corrosion and embrittlement. Long, accurately machined threads provide full thread contact. Heavy disc-stem connection withstands wearing action when opening valve to prevent stem failure under strain.

Repacking Valves are repackable under pressure when wide open. Stuffing box and packing nut are exceptionally deep to insure firm thread engagement when fully packed. Back seats above stem threads make scale formation unlikely and provide a tight seat.

Discs Renewable. Two types:
Double wedge (Uni-ball construction) Disc readily adjusts to the seat taper, insuring a tight valve. Sturdy disc collar strengthens disc-stem connection. Easy to assemble and with valve wide open the disc is drawn up into the bonnet and cannot drop off stem.
Solid wedge Accurately machined with disc-wing guides that conduct the disc to a firm, tight seat. Ideal for food processing lines and handling gummy substances where entrapment of line materials within the disc is undesirable.

Seats Integral. Accurately tapered to insure perfect seating of the discs.

Hexagon head gland Permits the use of a light wrench to loosen and raise gland.

Non-slip handwheel Insures tight closing.

Principal Parts and Materials

Part	Fig	Material	ASTM
Body & Bonnet	All	T-1 Bronze	B62
Disc	All	T-1 Bronze	B62
Stem	All	Stemalloy, Rod (C69700)	B371
Packing	All	JC 168 Kevlar	–

These valves comply with ANSI B16.24 and MSS-SP-80

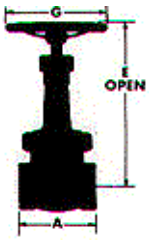

Dimensions in inches Weights in Pounds

Size	¼	3/8	½	¾	1	1 ¼	1 ½	2
A	1 15/16	1 15/16	2 5/16	2 ½	2 13/16	3	3 3/8	3 7/8
E	4 9/16	4 9/16	5 5/16	6 5/8	7 7/8	9 1/8	10 7/16	12 ¾
G	2 ¼	2 ¼	2 ½	3	3 ½	4 1/8	4 5/8	5 1/8
Fig 3125 Wts	1.1	1.1	1.5	2.3	3.2	4.9	6.7	11.0
Fig 3127 Wts	1.1	1.0	1.5	2.2	3.2	4.8	6.8	11.0

LUNKENHEIMER®
THE ONE Great NAME IN VALVES

CINCINNATI VALVE COMPANY
LICENSEE OF LUNKENHEIMER VALVES

P.O. BOX 141451 . CINCINNATI, OH 45250-1451 . U.S.A.
PHONE: 513-471-8258 . FAX: 513-471-8327

Class

125

Lunkenheimer Bronze Gate Valves

125 lb SP
200 lb WOG
Screw-in bonnet, Solder end

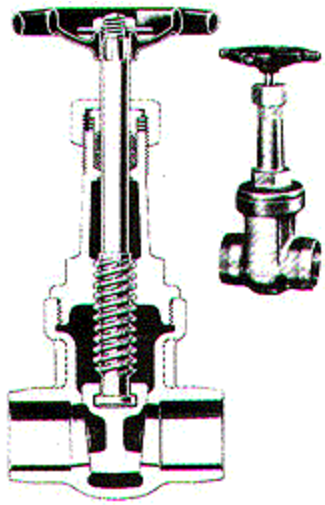

Rising stem
Solid wedge disc
Fig 2132

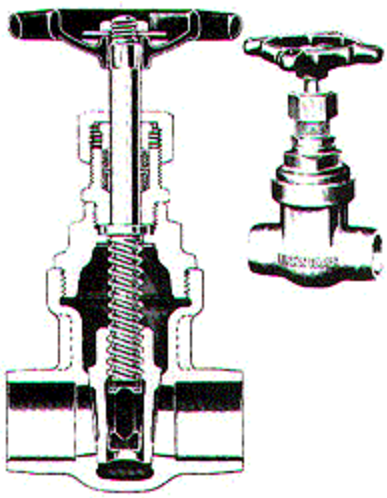

Non-rising stem
Single wedge disc
Fig 2133

Bronze bonnet gate valves are designed for steam, water, gas, oil and other general services. Rising stems are specified where stem position is used for visually determining whether the valve is open or closed. Non-rising stems are used where headroom is limited. Valves are designed for maximum interchangeability of parts to reduce spare parts inventories.

Bodies Full flow design. Connecting pipe ends will not distort valve seats. Same body is used for both rising and non-rising stem valves insuring interchangeability of trims. Disc guide channels are beveled at top of body for easy assembly.

Bonnets Heavy screw-in bonnet collar with ample thread engagement insures a tight body-collar joint. Wide flats provide a firm wrench hold for disassembling valve.

Stems Resistant to wear, corrosion and embrittlement. Long accurately machined threads provide full thread contact. Heavy disc-stem connection withstands wearing action when opening valve and prevents stem failure under strain. Rising stems have a backseat surface above the stem threads where it is less exposed to scale and damage from line debris.

Discs for rising stems.
Solid wedge discs Accurately machined with disc-wing guides that conduct the disc to a firm, tight seat. Ideal for food processing lines and handling gummy substances where entrapment of line materials within the disc is undesirable.

Discs for non-rising stems Single wedge discs threaded to engage with thread on stem, raising or lowering disc as stem is turned. Threads are long enough to be fully engaged whether valve is open or closed. Disc has wing guides which mate with channels with the body

Seats Integral. Accurately tapered to insure perfect seating of the discs.

Repacking Valves are repackable under pressure when wide open. Deep stuffing box and packing nut insure firm thread engagement when fully packed. Back seats above stem threads make scale formation unlikely and provide a tight seal.

Hexagon head gland Permits the use of a light wrench to easily loosen and raise gland.

Non-slip handwheel Insures tight closing.

Dimensions in inches Weights in Pounds

Size	3/8	½	¾	1	1 ¼	1 ½	2	2 ½	3
A	1 15/16	2 3/8	2 7/8	3 3/16	3 7/16	3 7/8	4 1/2	5 1/4	6
C	½	11/16	7/8	15/16	1	1 1/8	1 3/8	1 5/8	1 7/8
D Bore	.503	.628	.878	1.129	1.379	1.629	2.129	2.629	3.129
E	2 ¼	2 ½	3	3 1/2	4 1/8	4 5/8	5 1/8	5 1/2	6
F	4 9/16	5 5/16	6 5/8	7 7/8	9 1/8	10 7/16	12 3/4	15 1/16	17 5/16
FF NRS	3 11/16	4 3/16	5	5 3/4	6 7/16	7 1/4	8 5/8	9 13/16	11 1/16
Fig 2132 Wts	.8	1.2	2.0	2.9	4.0	5.7	9.0	14.0	21.0
Fig 2133 Wts	.8	1.1	1.8	2.6	3.6	5.2	8.1	13.0	19.0

Principal Parts and Materials

Part	Fig	Material	ASTM
Body & Bonnet	All	T-1 Bronze	B62
Disc	All	T-1 Bronze	B62
Stem	All	Stemalloy, Cast (C87500)	B371
Packing	All	JC 168 Kevlar	–

These valves comply with ANSI B16.24 and MSS-SP-80

LUNKENHEIMER®
THE ONE Great NAME IN VALVES

CINCINNATI VALVE COMPANY
LICENSEE OF LUNKENHEIMER VALVES

P.O. BOX 141451 . CINCINNATI, OH 45250-1451 . U.S.A.
PHONE: 513-471-8258 . FAX: 513-471-8327

Class

150

Lunkenheimer Bronze Gate Valves

150 lb SP
300 lb WOG
Screw-in bonnet, Screw end

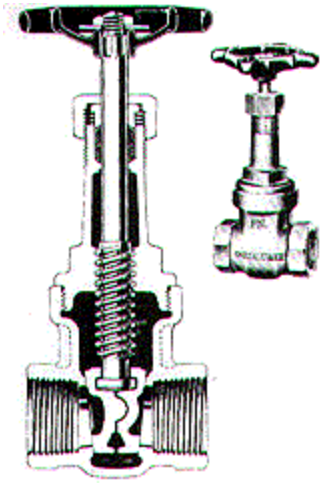

Rising stem
Uni-ball disc
Fig 2150

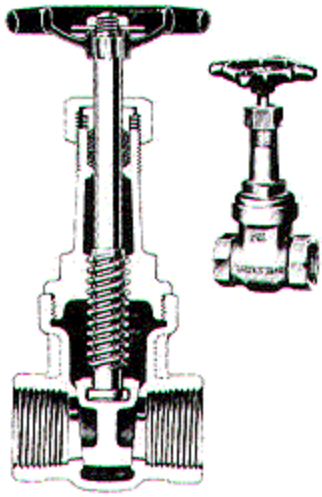

Rising stem
Solid wedge disc
Fig 2151

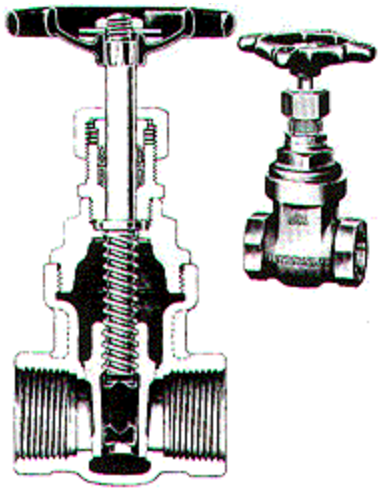

Non-rising stem
Single wedge disc
Fig 2153

Class 150 bronze gate valves are ruggedly designed for industrial and general service with steam, water, gas and oil.

Bodies

Screw ends Feature octagonal wrench pipe ends. Diaphragm configuration practically eliminates distortion of diaphragms by pipe ends. Same bodies are used for rising or non-rising stem valves. Disc guide channels are beveled at top of body for easy assembly.

Discs Renewable. Three types available:
Double wedge discs (Uni-ball construction) Discs readily adjust to the seat taper, insuring a tight valve. Sturdy disc collar strengthens disc-stem connection. Easy to assemble and with valve wide open the discs are drawn up into the bonnet and cannot drop off stem.

Solid wedge discs Accurately machined with disc-wing guides that conduct the disc to a firm, tight seat. Ideal for food processing lines and handling gummy substances where entrapment of line materials within the disc is undesirable.

Single wedge discs Threaded to engage with the thread on stem, raising or lowering disc as stem is turned. Threads fully engaged whether valve is open or closed.

Stems Resistant to wear, corrosion and embrittlement. Long, accurately machined threads provide full thread contact. Heavy, disc-stem connection withstands wearing action when opening valve and prevents stem failure under strain.

Bonnets Screw-in design. Provide strong, wide flats for a firm wrench hold.

Repacking Valves are repackable under pressure when wide open. Stuffing boxes are deep and well packed. Back seats above stem threads make scale formation unlikely and provide a tight seal.

Seats Integral. Accurately tapered to insure perfect seating of the discs.

Hexagon head gland Permits the use of a light wrench to easily loosen and raise gland.

Non-slip handwheel Insures tight closing.

Principal Parts and Materials

Part	Fig	Material	ASTM
Body & Bonnet	All	T-1 Steam Bronze	B62
Disc	All	T-1 Steam Bronze	B62
Stem	Rising Stems	Stemalloy, Rod (C69700)	B371
	Non-Rising Stems	Stemalloy, Cast (C87500)	B584
Packing	All	JC 168 Kevlar	–

These valves comply with ANSI B16.24 and MSS-SP-80

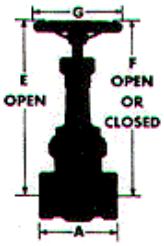

Dimensions in inches Weights in Pounds

Size	1/4	3/8	1/2	3/4	1	1 1/4	1 1/2	2	2 1/2	3
A	1 7/8	2	2 3/16	2 1/2	2 13/16	3 3/16	3 3/8	3 11/16	4 11/16	5 1/4
E	4 9/16	4 9/16	5 5/16	6 5/8	7 7/8	9 1/8	10 7/16	12 3/4	15 1/16	17 5/16
F NRS	3 5/8	3 5/8	4 3/16	5	5 3/4	6 7/16	7 1/4	8 5/8	9 13/16	11 1/16
G	2 1/4	2 1/4	2 1/2	3	3 1/2	4 1/8	4 5/8	5 1/8	5 1/2	6
Fig 2150 Wts	.9	1.0	1.5	2.3	3.0	4.6	6.4	10.5	16.0	23.5
Fig 2151 Wts	.9	.9	1.4	2.2	3.2	4.6	6.4	10.5	16.0	25.0
Fig 2153 Wts	.9	.9	1.3	2.1	3.0	4.2	6.0	9.9	15.0	22.0

LUNKENHEIMER®
THE ONE Great NAME IN VALVES

CINCINNATI VALVE COMPANY
LICENSEE OF LUNKENHEIMER VALVES

P.O. BOX 141451 . CINCINNATI, OH 45250-1451 . U.S.A.
PHONE: 513-471-8258 . FAX: 513-471-8327

Class

150

Lunkenheimer Bronze Gate Valves

150 lb SP
300 lb WOG
Union bonnet, Screw end

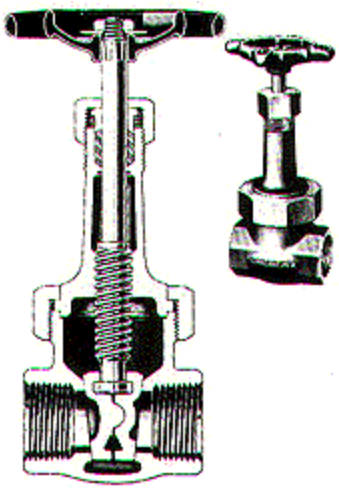

Rising stem
Uni-ball disc
Fig 3150

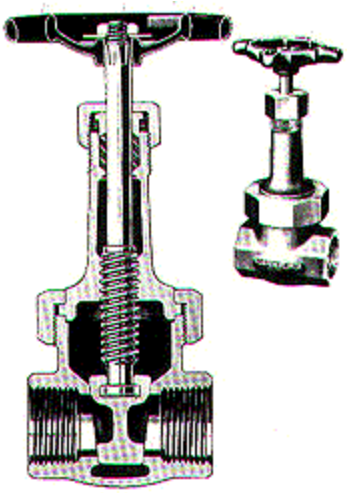

Rising stem
Solid wedge disc
Fig 3151

Union bonnet valves provide strong, safe, reliable service in industrial applications. The bonnet is centered by a lip extending into the neck of the valve and securely held in place so that it cannot be accidentally backed out of position.

Bonnets Union design. Heavy bonnet rings are octagonal to provide a firm wrench hold and increase strength.

Bodies Full, cylindrical body minimizes distortion. Diaphragm configuration practically eliminates distortion of diaphragms by pipe ends. Disc guide channels are beveled at top of body for easy assembly.

Stems Resistant to wear, corrosion and embrittlement. Long, accurately machined threads provide full thread contact. Heavy, disc-stem connection withstands wearing action when opening valve and prevents stem failure under strain.

Repacking Valves are repackable under pressure when wide open. Stuffing box and packing nut are exceptionally deep to insure firm thread engagement when fully packed. Back seats above stem threads make scale formation unlikely and provide a tight seal.

Renewable discs Two types available: Double wedge (Uni-ball construction). Disc readily adjusts to the seat taper, insuring a tight valve. Sturdy disc collar strengthens disc-stem connection. Easy to assemble and with valve wide open the disc is drawn up into the bonnet and cannot drop off stem.

Solid wedge Accurately machined with disc-wing guides that conduct the disc to a firm, tight seat. Ideal for food processing lines and handling gummy substances where entrapment of line materials within the disc is undesirable.

Seats Integral Accurately tapered to insure perfect seating of the discs.

Hexagon head gland Permits the use of a light wrench to loosen and raise gland.

Non-slip handwheel Insures tight closing.

Principal Parts and Materials

Part	Fig	Material	ASTM
Body & Bonnet	All	T-1 Bronze	B62
Disc	All	T-1 Bronze	B62
Stem	Rising Stems	Stemalloy, Rod (C69700)	B371
Packing	All	JC 168 Kevlar	–

These valves comply with ANSI B16.24 and MSS-SP-80

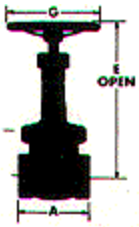

Dimensions in inches Weights in Pounds

Size	1/4	3/8	1/2	3/4	1	1 1/4	1 1/2	2
A	1 7/8	2	2 3/16	2 1/2	2 13/16	3 3/16	3 3/8	3 11/16
E	4 9/16	4 9/16	5 5/16	6 5/8	7 7/8	9 1/8	10 7/16	12 3/4
G	2 1/4	2 1/4	2 1/2	3	3 1/2	4 1/8	4 5/8	5 1/8
Fig 3150 Wts Fig 3151 Wts	1.0	1.0	1.5	2.3	3.2	5.0	6.6	11.0

LUNKENHEIMER®
THE ONE Great NAME IN VALVES

CINCINNATI VALVE COMPANY
LICENSEE OF LUNKENHEIMER VALVES

P.O. BOX 141451 . CINCINNATI, OH 45250-1451 . U.S.A.
PHONE: 513-471-8258 . FAX: 513-471-8327

Class

150

Lunkenheimer Bronze Gate Valves

150 lb SP
225 lb WOG
Screw-in bonnet, Flanged end

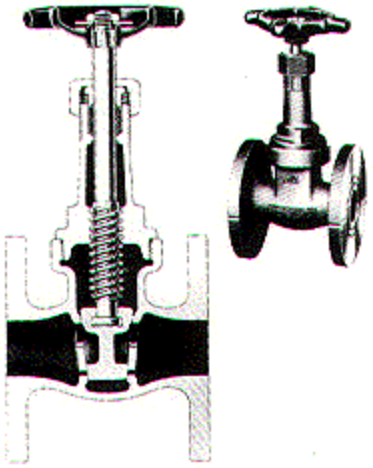

Rising Stem
Solid wedge disc
Fig 2157

Class 150 bronze gate valves are ruggedly designed for industrial and general service with steam, water, gas and oil.

Bodies Flanged ends Easy to remove from the line, an advantage when dealing with corrosive chemicals.

Discs Renewable

Solid wedge discs Accurately machined with disc-wing guides that conduct the disc to a firm, tight seat. Ideal for food processing lines and handling gummy substances where entrapment of line materials within the disc is undesirable.

Stems Resistant to wear, corrosion and embrittlement. Long, accurately machined threads provide full thread contact. Heavy, disc-stem connection withstands wearing action when opening valve and prevents stem failure under strain.

Bonnets Screw-in design. Provide strong, wide flats for a firm wrench hold.

Flanges Conform to MSS 150 lb SP Bronze.

Repacking Valves are repackable under pressure when wide open. Stuffing boxes are deep and well packed. Back seats above stem threads make scale formation unlikely and provide a tight seat.

Seats Integral. Accurately tapered to insure perfect seating of the discs.

Hexagon head gland Permits the use of a light wrench to easily loosen and raise gland.

Non slip handwheel Insures tight closing.

Principal Parts and Materials

Part	Fig	Material	ASTM
Body & Bonnet	All	T-1 Steam Bronze	B62
Disc	All	T-1 Steam Bronze	B62
Stem	Rising Stems	Stemalloy, Rod (C69700)	B371
Packing	All	JC 168 Kevlar	–

These valves comply with ANSI B16.24 and MSS-SP-80

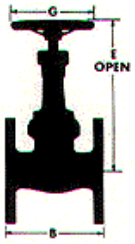

Dimensions in inches Weights in Pounds

Size	1/2	3/4	1	1 1/4	1 1/2	2	2 1/2	3
B	3 1/16	3 1/2	3 13/16	4 1/4	4 7/8	5 5/8	6 3/4	7 1/2
E	5 5/16	6 5/8	7 7/8	9 1/8	10 7/16	12 3/4	15 1/16	17 5/16
G	2 1/2	3	3 1/2	4 1/8	4 5/8	5 1/8	5 1/2	6
Fig 2157 Wts	–	4.5	6.8	8.6	11.5	18.5	29.0	39.0

LUNKENHEIMER®
THE ONE Great NAME IN VALVES

CINCINNATI VALVE COMPANY
LICENSEE OF LUNKENHEIMER VALVES

P.O. BOX 141451 . CINCINNATI, OH 45250-1451 . U.S.A.
PHONE: 513-471-8258 . FAX: 513-471-8327

Class

200

Lunkenheimer Bronze Gate Valves

200 lb SP 550°F
400 lb WOG
Screw-in bonnet, Outside screw and Screw end

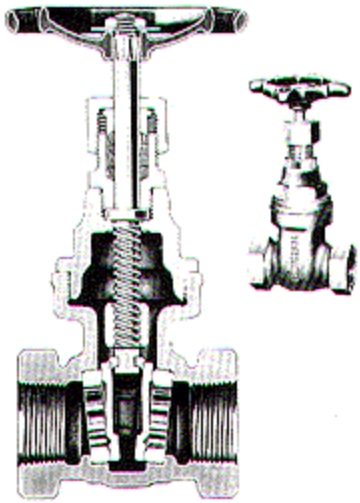

Screw-in bonnet
Non-rising stem
Single wedge disc
Fig 768

Valves feature renewable discs and seats.

Renewable discs Single wedge discs are designed with built-in flexibility for pressure tight seating and are bronze in sizes smaller than one inch; nickel alloy in larger sizes.

Renewable seats Nickel alloy seat rings in sizes one inch and larger. (Smaller sizes have integral bronze seats.)

Bodies Top quality, corrosion resistant steam bronze.

Stems Resistant to wear, corrosion and embrittlement. Long, accurately machined threads provide full thread contact. Heavy, disc-stem connection withstands wearing action when opening valve and prevents stem failure under strain.

Repacking Valves are repackable under pressure when wide open. Stuffing boxes are deep and well packed. Back seat above stem threads make scale formation unlikely and provides a tight seat.

Hexagon head gland Permits the use of a light wrench to easily loosen and raise gland.

Non-slip handwheel Insures tight closing.

Principal Parts and Materials

Part	Fig/Sizes	Material	ASTM
Body & Bonnet	All	S-1 Steam Bronze	B61
Disc	≥ 1" < 1"	Nickel Alloy NT-4 Bronze	– B 61
Stem	All	Stemalloy, Cast (C87500)	B584
Seat Ring	< 1" ≥ 1"	S-1 Steam Bronze (Integral) Nickel Alloy NT-4	B 61 –
Packing	All	JC 168 Kevlar	–

These valves comply with ANSI B16.24 and MSS-SP-80

Dimensions in inches Weights in Pounds

Size	1/4	3/8	1/2	3/4	1	1 1/4	1 1/2	2	2 1/2	3
A	2 1/16	2 3/16	2 7/16	2 3/4	3 5/16	3 5/8	3 15/16	4 9/16	5 1/4	5 5/8
E	4 3/16	4 3/16	4 3/8	5 3/8	6 1/2	7 3/16	8 3/16	9 9/16	10 13/16	12 1/4
G	2 1/2	2 1/2	2 1/2	3	3 1/2	4 1/8	4 5/8	5 1/8	6	7
Fig 768 Wts	1.0	1.0	1.3	2.1	3.5	5.4	7.6	12.0	20.0	29.0

LUNKENHEIMER®
THE ONE Great NAME IN VALVES

CINCINNATI VALVE COMPANY
LICENSEE OF LUNKENHEIMER VALVES

P.O. BOX 141451 . CINCINNATI, OH 45250-1451 . U.S.A.
PHONE: 513-471-8258 . FAX: 513-471-8327

Class

200

Lunkenheimer Bronze Gate Valves

200 lb SP 550°F
400 lb WOG
Union bonnet, Screw end

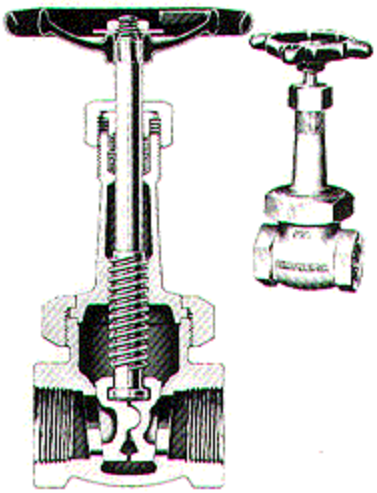

Rising stem
Double wedge disc
Union bonnet, 2 inches and smaller
Bolted bonnet, 2½ and 3 inches
Fig 2228

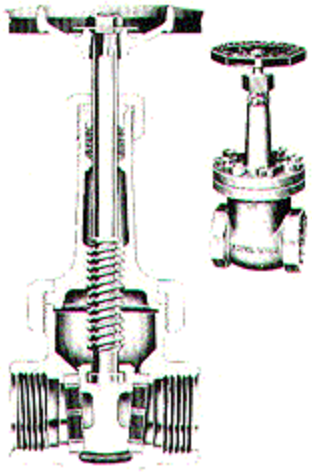

Rising stem
Solid wedge disc
Union bonnet 2 inches and smaller
Bolted bonnet 2½ and 3 inches
Fig 2227

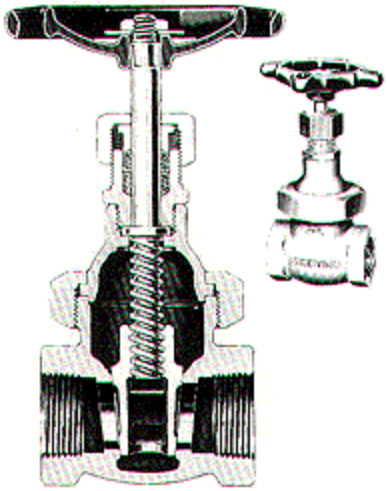

Non-rising stem
Single wedge disc
Union bonnet 2 inches and smaller
Bolted bonnet 2½ and 3 inches
Fig 2230

Designed for rugged service applications, with maximum resistance to distortion produced by internal pressure.

Bodies Full, cylindrical design for maximum strength, made of corrosion resistant Steam Bronze. Figures 2227, 2228, and 2230 have identical bodies.

Seats Renewable and integral:
Figure 2227 has renewable seat rings of Monel alloy in 1 inch and are large sizes; integral seats in smaller sizes. Figures 2228 and 2230 have precision tapered integral seats.

Discs Renewable nickel alloy. Three types available:
Double wedge Male-female construction. Adjusts readily to taper seats, sturdy collar strengthens disc-stem connection.

Solid wedge Accurately machined with disc-wing guides that conduct the disc to a firm, tight seat.

Single wedge Thread in disc engages stem thread, moving disc as stem is turned.

Bonnets Sizes 2" and smaller have union bonnet connection; 2½" and 3" have bolted bonnets

Stems Resistant to wear, corrosion and embrittlement. Long, accurately machined threads provide full thread contact. Heavy, disc-stem connection withstands wearing action when opening valve and prevents stem failure under strain.

Repacking Stuffing boxes are deep and valves are repackable under pressure when wide open. Back seats above stem threads make scale formation unlikely and provide a tight seal.

Hexagon head glands Permit the use of a light wrench to loosen and raise gland.

Non-slip handwheel Insures tight closing.

Dimensions in inches Weights in Pounds

Size	1/4	3/8	1/2	3/4	1	1 1/4	1 1/2	2	2 1/2	3
A Fig 2227	2 3/16	2 1/4	2 1/2	2 3/4	3 1/2	3 3/4	4 1/16	4 9/16	5 3/4	6 1/4
A Fig 2228 2230	2 3/16	2 1/4	2 1/2	2 3/4	3 1/16	3 3/8	3 11/16	4 9/16	5 3/8	6
B	–	–	–	–	–	–	–	–	5 11/16	6 7/16
E	4 15/16	4 15/16	5 13/16	7 1/16	8 1/8	9 7/16	10 3/4	13 1/16	15 3/8	17 13/16
F NRS	4 1/16	4 1/16	4 5/8	5 5/8	6	6 7/8	7 3/4	9	–	–
G	2 1/2	2 1/2	3	3 1/2	4 1/8	4 5/8	5 1/8	5 1/2	6	7
Fig 2227 Wts	1.2	1.2	1.8	3.0	5.0	7.0	12.0	17.0	30.0	40.0
Fig 2228 Wts	1.2	1.2	1.8	2.8	3.8	5.6	7.6	12.5	25.0	36.0
Fig 2230 Wts	1.2	1.2	1.8	2.7	3.6	5.1	9.8	12.0	–	–

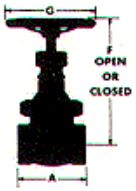

Principal Parts and Materials

Part	Fig	Material	ASTM
Body & Bonnet	All	S-1 Steam Bronze	B61
Disc	All	Nickel Alloy NT-4	–
Stem	Rising	Stemalloy, Rod (C69700)	B371
	Non-Rising	Stemalloy, Cast (C87500)	B584
Packing	All	JC 168 Kevlar	–

These valves comply with ANSI B16.24 and MSS-SP-80

LUNKENHEIMER®
THE ONE Great NAME IN VALVES

CINCINNATI VALVE COMPANY
LICENSEE OF LUNKENHEIMER VALVES

P.O. BOX 141451 . CINCINNATI, OH 45250-1451 . U.S.A.
PHONE: 513-471-8258 . FAX: 513-471-8327

Class

300

Lunkenheimer Bronze Gate Valves

300 lb SP 550°F
600 lb WOG
Screw-in bonnet, Screw end

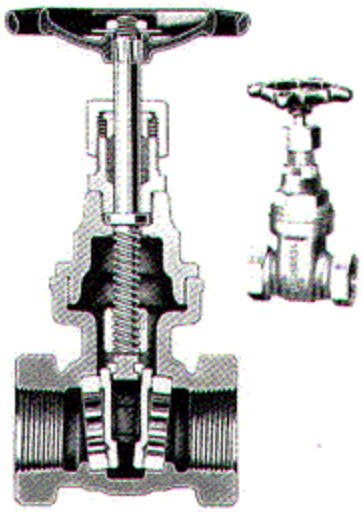

Non-rising stem
Single wedge disc
Screw-in bonnet
Fig 771

Designed to withstand severe operating conditions. Renewable discs and seats.

Bodies Proportioned for maximum strength, made of corrosion-resistant steam bronze. Extra length pipe threads prevent pipe ends from jamming against seats.

Seats Two types available:
Renewable nickel alloy rings In 1-inch and larger sizes.
Integral seats. In smaller sizes, precision tapered for accurate seating.

Discs Renewable; 1-inch and larger are of nickel alloy with improved flexibility for easier, tighter closing. Discs are bronze in smaller sizes.

Screw-in bonnets Heavy bonnet collar with ample thread engagement insures a tight body-bonnet joint.

Repacking Stuffing boxes are deep and valves are repackable under pressure when wide open. Back seats above stem threads make scale formation unlikely and provide a tight seal.

Stems Resistant to wear, corrosion and embrittlement. Long, accurately machined threads provide full thread contact. Heavy, disc-stem connection withstands wearing action when operating valve and prevents stem failure under strain.

Hexagon head glands Permit the use of a light wrench to loosen and raise gland.

Non-slip handwheel Insures tight closing.

Dimensions in inches Weights in Pounds

Size	1/4	3/8	1/2	3/4	1	1 1/4	1 1/2	2	2 1/2	3
A	2 5/16	2 7/16	2 3/4	3 1/16	3 13/16	4 3/16	4 9/16	5 1/8	5 13/16	6 1/4
E	4 3/4	4 3/4	5 1/4	6 1/4	7 1/2	8 1/2	9 1/2	10 3/4	12 1/8	13 9/16
G	2 1/2	2 1/2	3	3 1/2	4 1/8	4 5/8	5 1/8	5 1/2	7	8
Fig 771 Wts	1.4	1.5	2.0	3.5	5.9	8.0	11.0	16.8	29.0	39.0

Principal Parts and Materials

Part	Fig/Sizes	Material	ASTM
Body & Bonnet	All	S-1 Steam Bronze	B61
Disc	≥ 1" < 1"	Nickel Alloy NT-4 Bronze	– B61
Stem	All	Stemalloy, Cast (C87500)	B584
Seat Ring	≥ 1" < 1"	Nickel Alloy NT-4 Bronze (Integral)	– B61
Packing	All	JC 168 Kevlar	–

These valves comply with ANSI B16.24 and MSS-SP-80

LUNKENHEIMER®
THE ONE Great NAME IN VALVES

CINCINNATI VALVE COMPANY
LICENSEE OF LUNKENHEIMER VALVES

P.O. BOX 141451 . CINCINNATI, OH 45250-1451 . U.S.A.
PHONE: 513-471-8258 . FAX: 513-471-8327

Class

350

Lunkenheimer Bronze Gate Valves

350 lb SP 550°F
1000 lb WOG Screw-in bonnet
Union bonnet/Bolted bonnet, Screw end

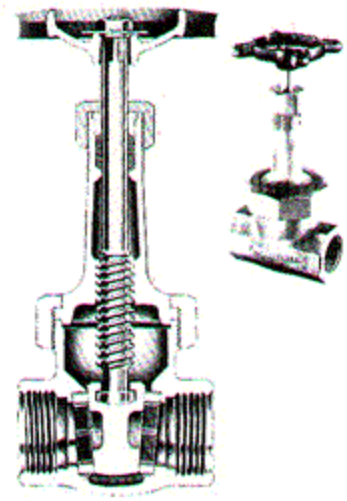

Rising stem
Solid wedge disc
Union bonnet ¼-2 inches
Fig 1962

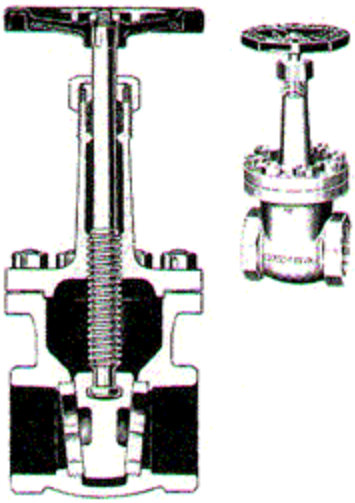

Rising stem
Solid wedge disc
Bolted bonnet 2½ and 3 inches
Fig 1962

Large sizes feature renewable nickel alloy discs and seats; smaller sizes have integral seats. Body design offers maximum resistance to distortion produced by internal pressure.

Bodies Full, cylindrical design for maximum strength, made of corrosion resistant Steam Bronze. Extra length pipe threads prevent pipe ends from jamming against seats.

Seats Two type available:
Renewable nickel alloy rings In 1 inch and larger sizes.

Integral seats In smaller sizes are precision tapered for accurate seating.

Discs Renewable nickel alloy.
Solid wedge Accurately machined with disc-wing guides that conduct the disc to a firm, tight seat.

Bonnets Two types available:
Union Bonnets Figure 1962, ¼"-2" sizes, provide strong, safe reliable service in industrial use.

Bolted bonnets Figure 1962, 2½" and 3" sizes, provide extra strength in larger sized valves.

Repacking Stuffing boxes are deep and valves are repackable under pressure when wide open. Back seats above stem threads make scale formation unlikely and provide a tight seal.

Stems Resistant to wear, corrosion and embrittlement. Long, accurately machined threads provide full thread contact. Heavy, disc-stem connection withstands wearing action when opening valve and prevents stem failure under strain.

Hexagon head glands Permit the use of a light wrench to loosen and raise gland.

Non-slip handwheel Insures tight closing.

Dimensions in inches Weights in Pounds

Size	1/4	3/8	1/2	3/4	1	1 1/4	1 1/2	2	2 1/2	3
A	2 5/16	2 7/16	2 3/4	3 1/16	3 13/16	4 3/16	9 1/4	5 1/8	5 13/16	6 1/4
E	5 9/16	5 9/16	6 13/16	8	9 1/4	10 5/8	12	14 7/16	16 7/16	18 9/16
F NRS	4 3/4	4 3/4	5 1/4	6 1/4	7 1/2	8 1/2	9 1/2	10 11/16	–	–
G	2 1/2	2 1/2	3	3 1/2	4 1/8	4 5/8	5 1/8	6	7	8
B	–	–	–	–	–	–	–	–	6 3/4	7 3/8
Fig 1962 Wt	1.9	2.0	2.7	4.5	8.0	10.4	18.7	24.4	36.0	49.0

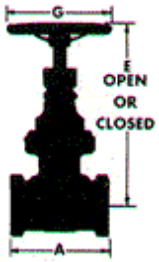

Principal Parts and Materials

Part	Fig/Sizes	Material	ASTM
Body & Bonnet		S-1 Steam Bronze	B61
Disc		Nickel Alloy NT-4	–
Stem		Stemalloy, Rod (C875700)	B584
Seat Ring	≥ 1" < 1"	Nickel Alloy NT-4 Bronze (Integral)	–
Packing	All	JC 168 Kevlar	–

These valves comply with ANSI B16.24 and MSS-SP-80

LUNKENHEIMER®
THE ONE Great NAME IN VALVES

CINCINNATI VALVE COMPANY
LICENSEE OF LUNKENHEIMER VALVES

P.O. BOX 141451 . CINCINNATI, OH 45250-1451 . U.S.A.
PHONE: 513-471-8258 . FAX: 513-471-8327

Class

125

Lunkenheimer Bronze Globe and Angle Valves

125 lb SP
200 lb WOG
Screw-in bonnet, Screw end

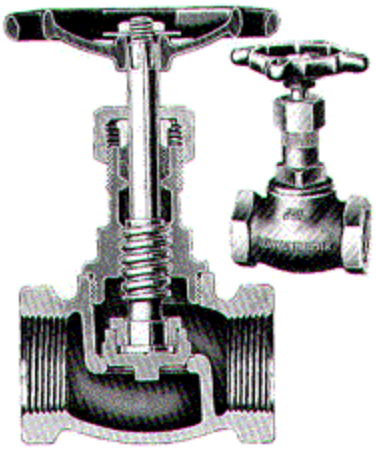

Globe
Tapered disc
Fig 2140

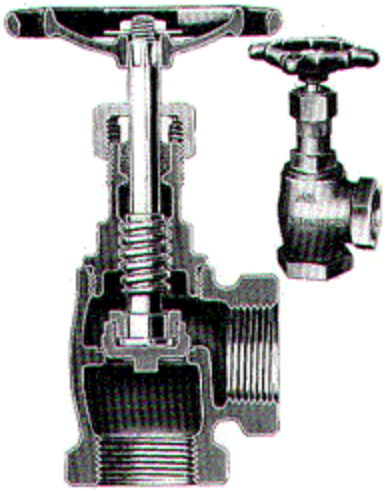

Angle
Tapered disc
Fig 2141

Class 125 bronze globe and angle valves are ruggedly designed and proportioned for multi-purpose use. These valves feature a tapered disc/seat closure with a large seating area.

Bodies Large and heavy for maximum strength. Pipe threads are long and clean cut to prevent distortion of diaphragm by pipe ends.

Bonnets Wide wrench flats for easy disassembly. Collar does not overlap body neck.

Seats Large seating area is integral with body; tapered design insures a tight closure.

Discs Renewable. Swivel on stems in ¾" size and larger; in smaller sizes are integral with stem.

Stems Exceptionally resistant to wear, corrosion and embrittlement.

Repacking Valves are repackable under pressure when wide open. Stuffing boxes are deep and well packed.

Hexagon head gland Permits the use of a light wrench to loosen and raise gland.

Non-slip handwheel Insures tight closing.

Principal Parts and Materials

Part	Fig/Sizes	Material	ASTM
Body & Bonnet	All	S-1 Steam Bronze	B61
Disc	< ½"	Stemalloy, Rod (C69700)	B371
	> ½"	S-1 Steam Bronze	B61
Stem	All	Stemalloy, Rod (C69700)	B371
Packing	All	JC 168 Kevlar	–

These valves comply with ANSI B16.24 and MSS-SP-80

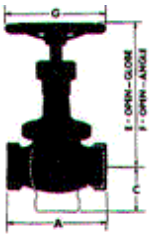

Dimensions in inches Weights in Pounds

Size	1/8	1/4	3/8	1/2	3/4	1	1 1/4	1 1/2	2	2 1/2	3
A	1 7/16	1 7/8	2	2 1/4	2 3/4	3 1/4	3 3/4	4 1/4	5	6	7
C	23/32	15/16	1	1 1/8	1 3/8	1 5/8	1 7/8	2 1/8	2 1/2	3	3 1/2
E	2 3/4	3 3/8	3 3/8	3 7/8	4 13/16	5 1/16	5 3/4	6 3/8	7 9/16	8 11/16	9 3/8
F	2 11/16	3 5/16	3 5/16	3 13/16	4 11/16	5	5 5/8	6 1/4	7 7/16	8 1/2	9 1/8
G	1 1/2	2 1/4	2 1/4	2 1/2	3	3 1/2	4 1/8	4 5/8	5 1/8	5 1/2	6
Fig 2140 Wts	.3	.7	.7	1.0	1.6	2.3	3.6	4.7	7.7	12.0	19.0
Fig 2141 Wts	.3	.6	.6	1.0	1.6	2.1	3.2	4.8	7.5	11.5	18.0

LUNKENHEIMER®
THE ONE Great NAME IN VALVES

CINCINNATI VALVE COMPANY
LICENSEE OF LUNKENHEIMER VALVES

P.O. BOX 141451 . CINCINNATI, OH 45250-1451 . U.S.A.
PHONE: 513-471-8258 . FAX: 513-471-8327

Class

150

Lunkenheimer Bronze Globe and Angle Valves

150 lb SP
300 lb WOG
Screw-over bonnet,
Screw end

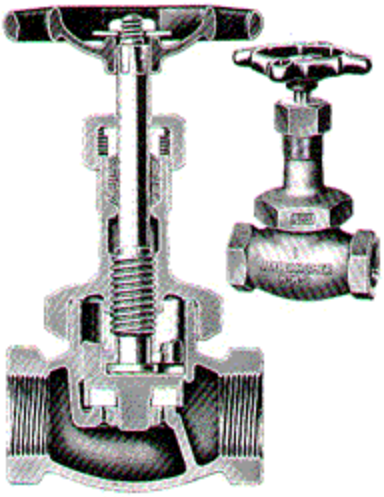

Globe
Non-metallic disc
Fig 123

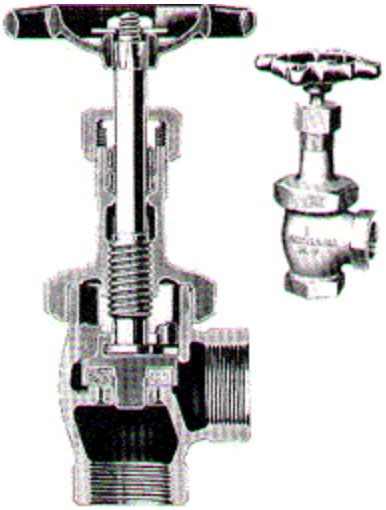

Angle
Non-metallic disc
Fig 214

Non-metallic disc valves are used in industry where a tight seat is required with minimum effort. Discs are quick and inexpensive to renew. Trim is interchangeable on screw and solder end bodies.

Discs Non-metallic resilient Teflon* discs aid in tight seating. Renewable so worn discs can easily be replaced. Disc holder slips on end of stem and has four guides to insure tight, accurate seating.

Seats Integral with body. Has extra height to make up for any wear in disc.

Bonnets. Screw-over design. Slight opening of handwheel draws disc into bonnet. Entire assembly can be held intact in one hand when removed.

Bodies Ruggedly proportioned for full flow. Heavy necks will not distort under strain.

Stems Exceptionally resistant to wear, corrosion and embrittlement.

Repacking Valves are repackable under pressure when wide open. Stuffing boxes are deep and well packed. Back seats above stem threads made scale formation unlikely and provide a tight seal.

Hexagon head glands Permit the use of a light wrench to loosen and raise gland.

Non-slip handwheel Insures tight closing.

*Registered Trademark of E.I. DuPont de Nemours and Co.

Dimensions in inches Weights in Pounds

Size	1/8	1/4	3/8	1/2	3/4	1	1 1/4	1 1/2	2	2 1/2	3
A	2	2 3/16	2 1/2	2 13/16	3 5/16	4	4 1/2	5 1/16	6 1/8	7 1/4	8 3/8
C	15/16	1 1/32	1 3/16	1 5/16	1 9/16	1 15/16	2 3/16	2 7/16	2 15/16	3 7/16	4
E	3 15/16	3 15/16	4 11/16	5 3/8	6 1/8	6 11/16	7 1/2	8 5/16	9 9/16	10 5/8	12 1/8
F	3 7/8	3 7/8	4 5/8	5 5/16	6	6 9/16	7 3/8	8 3/16	9 3/8	10 7/16	11 13/16
G	2 1/4	2 1/4	2 1/2	3	3 1/2	4 1/8	4 5/8	5 1/8	5 1/2	6	8
Fig123Wts	.8	.8	1.2	1.7	2.6	4.1	5.9	8.0	13.5	22.5	34.0
Fig214Wts	.8	.8	1.2	1.6	2.6	4.0	5.6	8.1	13.5	21.0	33.0

Principal Parts and Materials

Part	Fig.	Material	ASTM
Body & Bonnet	All	T-1 Steam Bronze	B62
Disc	All	Teflon	D1457
Stem	All	Stemalloy, Rod (C69700)	B371
Disc Holder	All	T-1 Steam Bronze	B62
Packing	All	JC-168 Kevlar	–

These valves comply with ANSI B16.24 and MSS-SP-80

LUNKENHEIMER®
THE ONE Great NAME IN VALVES

CINCINNATI VALVE COMPANY
LICENSEE OF LUNKENHEIMER VALVES

P.O. BOX 141451 . CINCINNATI, OH 45250-1451 . U.S.A.
PHONE: 513-471-8258 . FAX: 513-471-8327

Class

150

Lunkenheimer
Bronze
Globe and Angle Valves

150 lb SP
150 lb WOG
Lever globe, Screw end

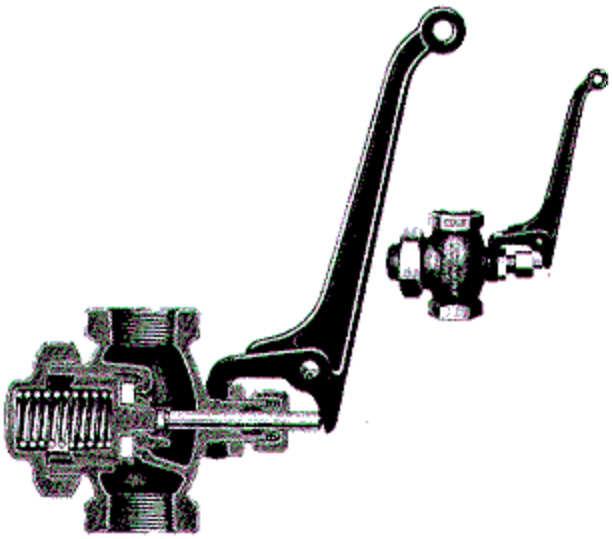

Pull lever
Non-metallic disc
No 1836

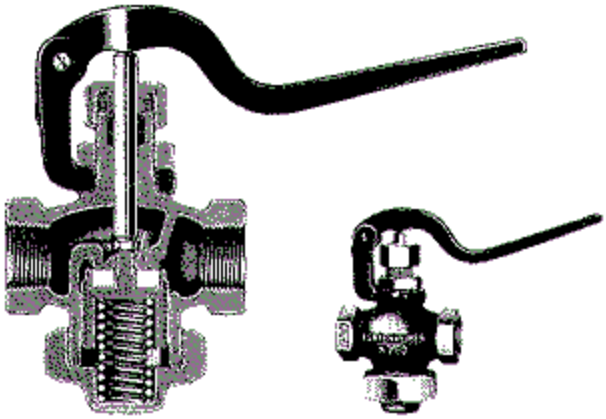

Grip lever
Non-metallic disc
No 1837

Quick Operating Valves designed for fast opening, self-closing service. Choose from Grip or Pull Lever operation.

Discs Non-metallic and renewable. Resilient Teflon* discs aid in tight seating. Worn discs can be easily replaced.

Disc holder and stem are accurately guided, aiding in easy operation and disc seating.

Fulcrums adjust to any point around axis of stem to provide direct, free operation from any point.

Spring Stainless steel. Securely holds disc to its seat in absence of pressure and assists in quick seating after opening.

Stems Stainless steel for strength and corrosion resistance.

Hexagon head gland prevents leakage around stem. Permits safe operation of lever by hand as well as by cord or chain.

Installation Note Valves should always be installed with pressure on spring side of disc, as indicated by the word "Inlet" cast on the proper pipe hexagon.

Principal Parts and Materials

Part	Fig	Material	ASTM
Body & Cap	All	T-1 Bronze	B62
Disc	All	Teflon	D1457
Stem	All	Stainless Steel 302	A276
Disc Holder	All	T-1 Bronze	B62
Spring	All	Stainless Steel 303	A313
Packing	All	JC168 Kevlar	–

These valves comply with ANSI B16.24 and MSS-SP-80

Dimensions in inches Weights in Pounds

Size	1/4	3/8	1/2	3/4	1	1 1/4	1 1/2	2
A	2 3/16	2 3/8	2 13/16	3 5/16	4	4 1/2	5 1/16	6 1/8
D	4 1/8	4 1/4	4 7/8	6 1/8	8 1/16	8 3/4	9 15/16	14 7/16
L	4	4	4 11/16	6	7 1/16	7 3/16	8 1/2	12 5/8
C	2 5/8	2 5/8	3 1/16	3 1/2	-	-	-	-
K	4 1/8	4 1/8	4 3/4	5 3/16	-	-	-	-
Fig 1836 Wts	1.0	1.2	1.7	2.7	4.1	5.9	8.2	14.0
Fig 1837 Wts	1.0	1.3	2.0	3.0	-	-	-	-

*Registered Trademark of E.I. DuPont de Nemours and Co.

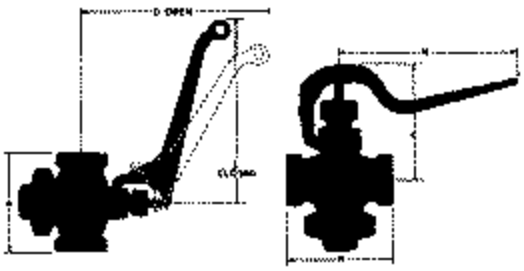

LUNKENHEIMER®
THE ONE Great NAME IN VALVES

CINCINNATI VALVE COMPANY
LICENSEE OF LUNKENHEIMER VALVES

P.O. BOX 141451 . CINCINNATI, OH 45250-1451 . U.S.A.
PHONE: 513-471-8258 . FAX: 513-471-8327

Class

200

Lunkenheimer Bronze Globe Valves

200 lb SP 550°F
400 lb WOG
Union bonnet, Screw end

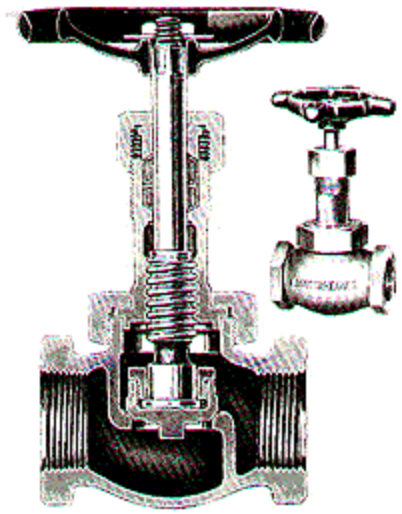

Globe
Tapered disc
Fig 407

Regrinding valves were first designed by Lunkenheimer; they are made so all parts can be renewed, and if the seating surfaces or discs become worn, they may be reground to their original tightness without removing them from the line.

Bodies Ample, with full flow areas and regrindable, integral seating surfaces.

Bonnets Union design aids in regrinding operation by centering the bonnet and working parts in correct alignment. Union bonnet valves provide strong, safe, reliable service in industrial applications.

Discs Renewable and regrindable. In ½" and smaller sizes stem and disc are one. Larger sizes have separate, swiveling disc. Small, round metal plate clamped between stem head and disc prevents swiveling during regrinding process.

Stems Exceptionally resistant to wear, corrosion and embrittlement.

Repacking Valves are repackable under pressure when wide open. Stuffing boxes are deep and well packed. Back seats above stem threads make scale formation unlikely and provide a tight seal.

Hexagon head glands Permit the use of a light wrench to loosen and raise gland.

Non-slip handwheel Insures tight closing.

Dimensions in inches Weights in Pounds

Size	1/8	1/4	3/8	1/2	3/4	1	1 1/2	2	2 1/2	3	
A	1 19/32	2 1/32	2 1/8	2 7/16	2 15/16	3 11/32	3 7/8	4 5/16	5 1/4	6 7/16	7 3/16
E	2 13/16	4 1/8	4 1/8	4 3/4	5 1/2	5 15/16	6 5/8	7 3/16	8 3/8	9 1/4	10
G	2 1/4	2 1/2	2 1/2	3	3 1/2	4 1/8	4 5/8	5 1/8	5 1/2	7	8
Fig 407 Wts.	4	.7	.8	1.1	2.1	3.0	4.2	6.0	9.9	18.0	25.0

Principal Parts and Materials

Part	Fig/Sizes	Material	ASTM
Body & Bonnet	All	S-1 Steam Bronze	B 61
Disc	< ½"	Stemalloy, Rod (C69700)	B371
	> ½"	S-1 Steam Bronze	B61
Stem	All	Stemalloy, Rod (C69700)	B371
Packing	All	JC168 Kevlar	–

These valves comply with ANSI B16.24 and MSS-SP-80

LUNKENHEIMER®
THE ONE Great NAME IN VALVES

CINCINNATI VALVE COMPANY
LICENSEE OF LUNKENHEIMER VALVES

P.O. BOX 141451 . CINCINNATI, OH 45250-1451 . U.S.A.
PHONE: 513-471-8258 . FAX: 513-471-8327

Class

200

Lunkenheimer
Bronze
Globe Valves

200 lb SP 550°F
400 lb WOG
Union bonnet,
Screw end

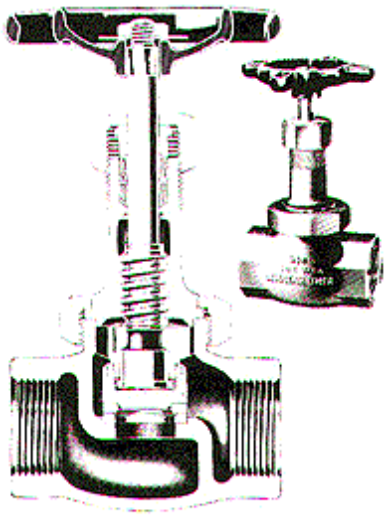

Globe
Flat disc
Fig LQ600-200

Designed to practically eliminate maintenance in average industrial use. Ideal for high pressure use in extremely severe services. Discs and seats are made of exceptionally wear-resistant nickel alloy.

Seats and discs Brinalloy.* Flat, lapped metal-to-metal seat design provides a leakproof seal and excellent throttling service. Because they need no replacement or regrinding, seats are fused to body.

Bodies Heavily proportioned for maximum service, made of the highest grade Steam Bronze for strength and corrosion resistance.

Bonnets Union design provides strong, safe reliable service in industrial applications.

Stems Exceptionally resistant to wear, corrosion, and embrittlement.

Repacking Valves are repackable under pressure when wide open. Stuffing boxes are deep and well packed. Back seats above stems make scale formation unlikely and provide a tight seal.

Hexagon head gland Permits the use of a light wrench to loosen and raise gland.

Non-slip handwheel Insures tight closing.

Principal Parts and Materials

Part	Fig	Material	ASTM
Body & Bonnet	All	S-1 Steam Bronze	B 61
Disc	All	Brinalloy Nickel Alloy NS8	–
Stem	All	Stemalloy, Rod (69700)	B371
Stem Ring	All	Brinalloy Nickel Alloy NS8	–
Packing	All	JC-168 Kevlar	–

These valves comply with ANSI B16.24 and MSS-SP-80

*Patented alloy – T.M. Reg.

Dimensions in inches Weights in Pounds

Size	1/4	3/8	1/2	3/4	1	1 1/4	1 1/2	2
A	2 5/16	2 5/16	2 3/8	2 7/8	3 1/8	3 7/8	4 5/16	5 1/4
D	2 1/2	2 1/2	2 1/2	3	3 1/2	4 1/8	4 5/8	5 1/8
E	4 1/4	4 1/4	4 1/4	5 1/8	5 3/4	6 11/16	7 5/16	8 5/16
LQ600-200 Wts	1.1	1.1	1.1	1.9	3.0	4.4	6.3	9.8

LUNKENHEIMER®
THE ONE Great NAME IN VALVES

CINCINNATI VALVE COMPANY
LICENSEE OF LUNKENHEIMER VALVES

P.O. BOX141451 . CINCINNATI, OH 45250-1451 . U.S.A.
PHONE: 513-471-8258 . FAX: 513-471-8327

Class

200

Lunkenheimer Bronze Globe Valves

200 lb SP 550°F
400 lb WOG
Union bonnet, Screw end

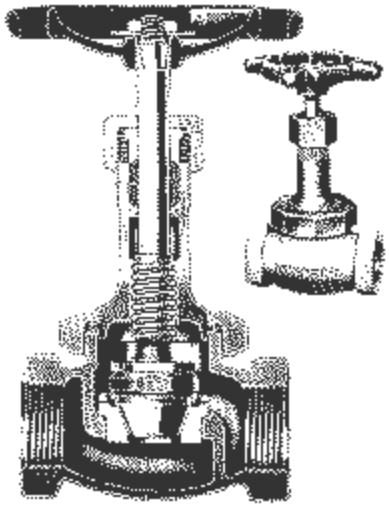

Globe
Stainless steel
Plug disc
Fig 73-PS

For maximum versatility in all types of general services, all parts of these "Renewo" valves are renewable. Seats and discs are interchangeable, made of tough materials, and can be reground without removing them from the line.

Seats and discs Interchangeable and regrindable.

500 Brinell stainless steel plug seats and discs. For throttling, drain, drip, water column blowdown, and other services normally destructive to seat services.

Bodies Full, cylindrical design.

Bonnets Union design provides strong, safe, reliable service in industrial applications.

Stems Exceptionally resistant to wear, corrosion, and embrittlement.

Repacking Valves are repackable under pressure when wide open. Back seats above stem threads make scale formation unlikely and provide a tight seal.

Hexagon head glands Permit the use of a light wrench to loosen and raise gland.

Non-slip handwheel Insures tight closing.

Principal Parts and Materials

Part	Fig	Material	ASTM
Body & Bonnet	All	S-1 Steam Bronze	B 61
Disc	All	500 Brinell Stainless Steel Type 420F	A276
Stem	All	Stemalloy, Rod (C69700)	B371
Packing	All	JC168 Kevlar	–

These valves comply with ANSI B16.24 and MSS-SP-80

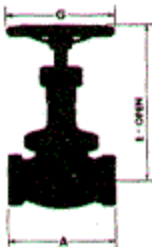

Dimensions in inches Weights in Pounds

Size	1/4	3/8	1/2	3/4	1	1 1/4	1 1/2	2	2 1/2	3
A	2 1/2	2 9/32	2 5/8	3 7/32	3 3/4	4 1/4	4 3/4	5 3/4	6 13/16	7 3/4
E	3 15/16	3 15/16	4 11/16	5 13/16	6 1/2	7 3/16	7 15/16	8 7/8	10	10 15/16
G	2 1/2	2 1/2	3	3 1/2	4 1/8	4 5/8	5 1/8	5 1/2	7	8
Fig 73-PS Wts	.9	1.0	1.5	2.6	3.6	5.3	7.2	12.0	21.0	29.0

LUNKENHEIMER®
THE ONE Great NAME IN VALVES

CINCINNATI VALVE COMPANY
LICENSEE OF LUNKENHEIMER VALVES

P.O. BOX 141451 . CINCINNATI, OH 45250-1451 . U.S.A.
PHONE: 513-471-8258 . FAX: 513-471-8327

Class

200

Lunkenheimer
Bronze
Globe Valves

200 lb SP 550°F
200 lb WOG
Lever globe, Screw end

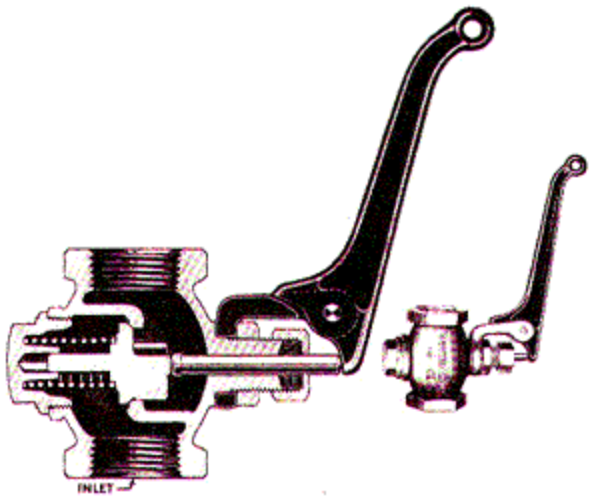

Pull lever
Tapered disc
Fig 635

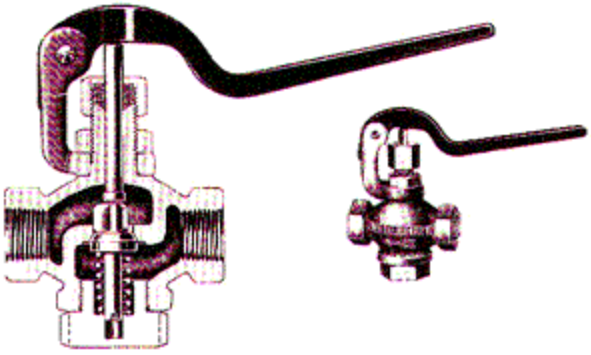

Grip lever
Tapered disc
Fig 1240

Designed for fast opening, self closing service in the control of steam, gas, or liquids at pressures to 200 pounds. Figure 1240 is designed for hand gripping and intended for air service. Figure 635 is designed for hand, cord, or chain operation. Lever is reversible and adjustable.

Seats and discs May be reground without removing valve from line. Integral seats.

Bodies Precise alignment of working parts assures tight closure of valve when lever is released.

Fulcrums Adjust to any point around axis of stem to provide direct, free operation from any point.

Spring Stainless steel. Securely holds disc to its seat in absence of pressure and assists in quick seating after opening.

Stems Exceptionally resistant to wear, corrosion and embrittlement.

Stuffing box Prevents wasteful leakage around stem and eliminates the hazard of escaping gas or fluid.

Installation Note Valves should be installed as indicated by flow direction arrow cast on side of body.

Dimensions in inches Weights in Pounds

Size	1/4	3/8	1/2	3/4	1	1 1/4	1 1/2	2
A	2 3/32	2 3/16	2 1/2	2 31/32	3 7/16	3 31/32	4 3/8	5 5/16
C	2 3/16	2 3/16	2 3/4	–	–	–	–	–
D	3 9/16	3 9/16	4 3/4	5 5/8	7 3/8	8 3/16	9 5/8	13 7/8
K	3 9/16	3 9/16	4 3/4	–	–	–	–	–
L	3 5/8	3 5/8	5 1/16	6 3/8	7 7/16	7 1/2	8 13/16	12 13/16
Fig 1240 Wts	.8	.8	1.4	–	–	–	–	–
Fig 635 Wts	.7	.8	1.2	2.0	3.0	4.1	6.0	9.3

Principal Parts and Materials

Part	Fig	Material	ASTM
Body & Cap	All	S-1 Steam Bronze	B61
Disc	All	S-1 Steam Bronze	B61
Stem	All	Brass, Rod	16
Spring	All	Stainless Steel #303	A313
Packing	All	JC168 Kevlar	–

These valves comply with ANSI B16.24 and MSS-SP-80

LUNKENHEIMER®
THE ONE Great NAME IN VALVES

CINCINNATI VALVE COMPANY
LICENSEE OF LUNKENHEIMER VALVES

P.O. BOX 141451 . CINCINNATI, OH 45250-1451 . U.S.A.
PHONE: 513-471-8258 . FAX: 513-471-8327

Class

300

Lunkenheimer Bronze Globe Valves

300 lb SP 550°F
600 lb WOG
Union bonnet, Screw end

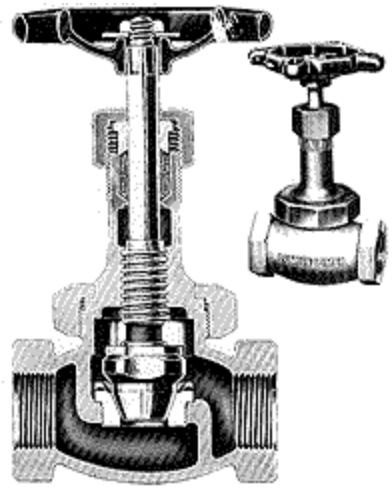

Globe
Plug disc
Fig 16-PS

For maximum versatility in all types of general services, all parts of these "Renewo" valves are renewable. Seats and discs are interchangeable, made of tough materials, and can be reground without removing them from the line.

Seats and discs Interchangeable and regrindable.

500 Brinell stainless steel plug seats and discs. For throttling, drain, drip, water column blowdown, and other services normally destructive to seat surfaces.

Bodies Highest quality steam bronze for strength and corrosion resistance.

Bonnets Union design provides strong, safe, reliable service in industrial use.

Stems Exceptionally resistant to wear, corrosion, and embrittlement.

Repacking Valves are repackable under pressure when wide open. Stuffing boxes are deep to insure firm thread engagement when fully packed. Back seats above stem threads make scale formation unlikely.

Hexagon head glands Permit the use of a light wrench to loosen and raise gland.

Non-slip handwheel Insures tight closing.

Dimensions in inches Weights in Pounds

Size	1/4	3/8	1/2	3/4	1	1 1/4	1 1/2	2	2 1/2	3
A	2 5/16	2 1/2	2 7/8	3 17/32	4 1/8	4 23/32	5¼	6 3/8	7 3/8	8 3/8
E	4 5/8	4 5/8	5 3/16	6 1/8	6 7/8	7 13/16	8 3/8	9 1/2	11 1/8	12 11/16
G	2 1/2	2 1/2	3	3 1/2	4 1/8	4 5/8	5 1/8	5 1/2	8	10
Fig 16 PS Wt	1.2	1.4	2.0	3.4	5.2	7.3	10.0	17.0	30.0	43.0

Principal Parts and Materials

Part	Fig	Material	ASTM
Body & Bonnet		S-1 Steam Bronze	B 61
Disc		500 Brinell Stainless Steel Type 420F	A276
Stem		Stemalloy, Rod (69700)	B371
Seat Ring		500 Brinell Stainless Steel Type 420F	A276
Packing		JC168 Kevlar	–

These valves comply with ANSI B16.24 and MSS-SP-80

LUNKENHEIMER®
THE ONE Great NAME IN VALVES

CINCINNATI VALVE COMPANY
LICENSEE OF LUNKENHEIMER VALVES

P.O. BOX 141451 . CINCINNATI, OH 45250-1451 . U.S.A.
PHONE: 513-471-8258 . FAX: 513-471-8327

Class

300

Lunkenheimer Bronze Globe Valves

300 lb SP 550°F
600 lb WOG
Union bonnet, Screw end

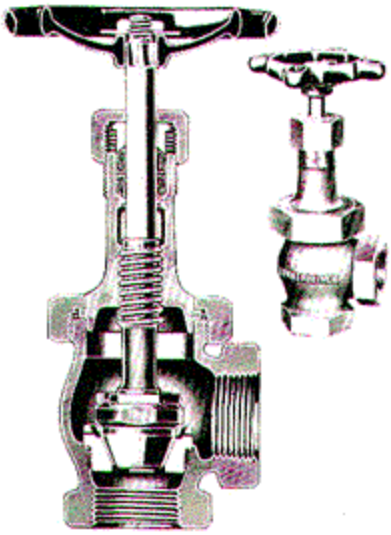

Angle
Plug disc
Fig 17-PS

For maximum versatility in all types of general services, all parts of these "Renewo" valves are renewable. Seats and discs are interchangeable, made of tough materials, and can be reground without removing them from the line.

Seats and discs Regrindable and interchangeable.

500 Brinell stainless steel plug seats and discs For throttling, drain, drip, water column blowdown, and other services normally destructive to seat surfaces.

Bodies Highest quality Steam Bronze for strength and corrosion resistance.

Bonnets Union design provides strong, safe, reliable service in industrial use.

Stems Exceptionally resistant to wear, corrosion, and embrittlement.

Repacking Valves are repackable under pressure when wide open. Stuffing boxes are deep to insure firm thread engagement when fully packed. Back seats above stem threads make scale formation unlikely.

Hexagon head glands Permit the use of a light wrench to loosen and raise gland.

Non-slip handwheel Insures tight closing.

Dimensions in inches Weights in Pounds

Size	1/4	3/8	1/2	3/4	1	1 1/4	1 1/2	2	2 1/2	3
C	1 3/32	1 5/32	1 3/8	1 5/8	1 29/32	2 7/32	2 7/16	3	3 19/32	4 1/8
F	4 5/8	4 5/8	5 3/16	6 1/8	6 7/8	7 13/16	8 3/8	9 1/2	11 1/8	12 11/16
G	2 1/2	2 1/2	3	3 1/2	4 1/8	4 5/8	5 1/8	5 1/2	8	10
Fig 17 PS Wt	1.2	1.3	1.9	3.2	4.8	7.2	9.3	16.0	26.0	–

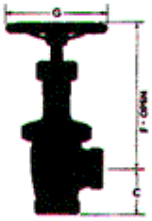

Principal Parts and Materials

Part	Fig	Material	ASTM
Body & Bonnet		S-1 Steam Bronze	B 61
Disc		500 Brinell Stainless Steel Type 420F	A276
Stem		Stemalloy, Rod (C69700)	B371
Seat Ring		500 Brinell Stainless Steel Type 420F	A276
Packing	All	JC168 Kevlar	–

These valves comply with ANSI B16.24 and MSS-SP-80

LUNKENHEIMER®
THE ONE Great NAME IN VALVES

CINCINNATI VALVE COMPANY
LICENSEE OF LUNKENHEIMER VALVES

P.O. BOX 141451 . CINCINNATI, OH 45250-1451 . U.S.A.
PHONE: 513-471-8258 . FAX: 513-471-8327

Class

125

Lunkenheimer Bronze Check Valves

125 lb SP
200 lb WOG
Swing check, Lift check
Screw end, Solder end

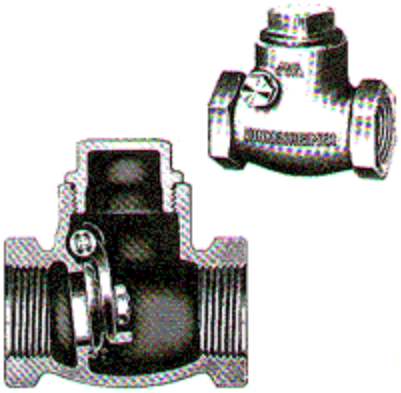

Swing check
Fig 2144

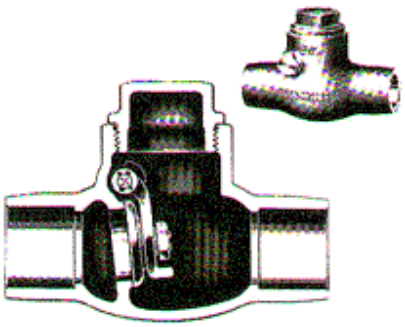

Swing check
Fig 2145

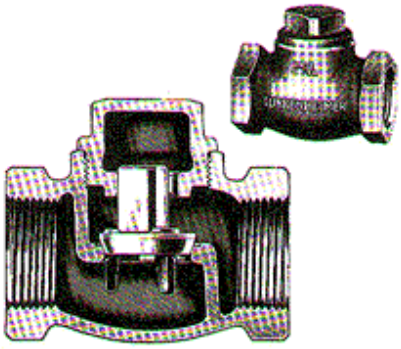

Horizontal lift check
Fig 2142

Ruggedly designed for dependable operation of steam, water, oil, gas and other fluid-handling lines where full, free flow is required. Seats and discs are regrindable. Slight pressure differential is required to open or close disc. Because of flow characteristics, they are generally used in conjunction with gate valves. Function in either horizontal or vertical position.

Discs Renewable and regrindable. Attached to disc carrier by locknut allowing disc to swivel, insuring a tight seal. Open easily with very low differential pressures.

Side plugs Serve as bearings for disc carrier pins. Easy to replace.

Seats Integral and regrindable; precisely aligned for tight, dependable seating.

Installation and maintenance Seats and discs may be reground through downstream pipe end.

Bodies Proportioned for maximum strength. Made of highest quality bronze for strength and corrosion resistance. Large clearances at ends of pipe threads permit tight joints without pipe ends jamming diaphragms, distorting seat, or choking flow.

Caps To prevent damage and leakage, the collar does not extend beyond the body neck. Wide flats for firm wrench grip. Strong threads for tight joints.

Ruggedly designed for dependable operation under conditions where pulsating action in line causes excessive wear in swing-type check valves. Discs are renewable. Because of flow characteristics, these valves are generally used in conjunction with globe valves.

Discs Bronze Renewable. Are guided above and below seating faces by disc stem guides and bottom disc guide lugs. Disc cocking is prevented, assuring smooth, easy operation.

Seats Integral. Precision machined to fit tapered discs. Located directly below the top opening, they are easy to reach for maintenance.

Maintenance Worn seats may be trued-up with a valve reseating tool, or the valve may be removed from the line and the seat trued-up the lathe.

Principal Parts and Materials

Part	Fig	Material	ASTM
Body & Cap	All	T-1 Steam Bronze	B 62
Disc	All	T-1 Steam Bronze	B 62

These valves comply with ANSI B16.24 and MSS-SP-80

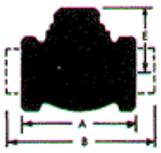

Dimensions in inches Weights in Pounds

Size	1/4	3/8	1/2	3/4	1	1 1/4	1 1/2	2	2 1/2	3
A	1 7/8	2	2 1/4	2 3/4	3 1/4	3 3/4	4 1/4	5	6	7
E	1 5/16	1 5/16	1 7/16	1 11/16	1 3/4	2 1/16	2 1/4	2 11/16	3 3/16	3 5/8
Fig 2142 Wts	.4	.4	.7	1.1	1.5	2.5	3.5	6.0	10.5	16.0
A	–	2 1/8	2 5/16	2 13/16	3 1/4	3 7/8	4 1/4	5	6 1/4	7 1/8
B	–	–	3 3/16	3 15/16	4 5/16	5	5 9/16	6 9/16	–	–
E	–	1 1/2	1 5/8	1 31/32	2 11/32	2 5/8	2 7/8	3 7/16	3 15/16	4 7/16
Fig 2144 Wts	–	.5	.7	1.1	1.8	2.7	3.7	6.4	10.5	16.0
Fig 2145 Wts	–	–	.7	1.1	1.7	2.6	3.5	6.0	–	–

LUNKENHEIMER®
THE ONE Great NAME IN VALVES

CINCINNATI VALVE COMPANY
LICENSEE OF LUNKENHEIMER VALVES

P.O. BOX 141451 . CINCINNATI, OH 45250-1451 . U.S.A.
PHONE: 513-471-8258 . FAX: 513-471-8327

Class

150

Lunkenheimer Bronze Check Valves

150 lb SP
300 lb WOG
Swing check, Lift check, Screw end

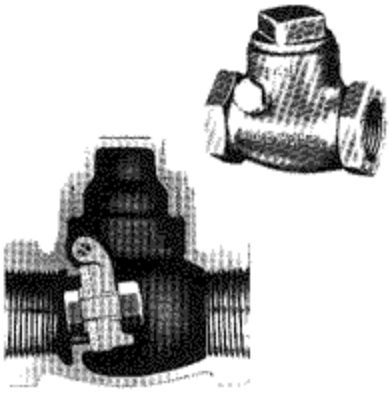

Swing check
Non-metallic disc
Fig 230-70

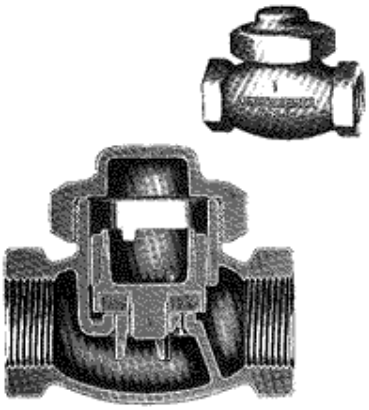

Lift check
Non-metallic disc
Fig 231

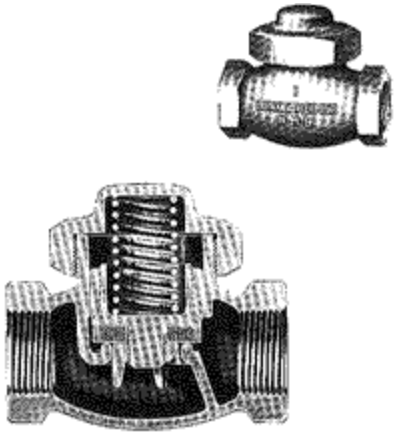

Spring lift check
Non-metallic disc
Fig 233

Ruggedly designed for dependable operation in general service use where full, free flow is required. Non-metallic discs close readily to a tight seat and are quick and inexpensive to replace. Valves function in either the vertical or horizontal position.

Discs Renewable, non-metallic resilient Teflon* discs are compounded for maximum wear and tightness. Depth of disc holder is equal to the thickness of the disc and provides full rim protection.

Seats Integral. Aligned for tight dependable seating.

Side plugs Renewable. Serve as bearings for disc carrier pins. Easy to replace.

Figure 233 is designed with a spring to counter situations where violent pulsing action exist.

Discs Renewable, non-metallic and resilient Teflon* discs are compounded for maximum wear and tightness. Disc holder is held within close tolerances by four guides to prevent cocking.

Seats Integral. Surface is rounded for narrow line contact and tighter seating.

Bodies Proportioned for maximum strength, full flow. Large clearances at end of pipe threads permit tight joints without pipe ends jamming diaphragms, distorting seat, or choking flow.

Caps To prevent damage and leakage, the collar does not extend beyond the body neck. Wide flats for firm wrench grip. Strong threads for tight joints.

Maintenance To renew disc, simply unscrew locknut from disc holder, remove old disc, and insert new one.

Dimensions in inches Weights in Pounds

Size	1/8	1/4	3/8	1/2	3/4	1	1 1/4	1 1/2	2
A	2	2 3/16	2 1/2	2 13/16	3 5/16	4	4 1/2	5 1/16	6 1/8
E	1 7/16	1 7/16	1 11/16	1 7/8	2 3/16	2 1/2	2 13/16	3 1/16	3 5/8
Fig 231 Wts	.5	.6	.8	1.1	2.0	2.8	4.3	5.8	11.0
Fig 233 Wts	.6	.6	.8	1.1	1.9	3.0	4.2	6.0	11.0
A	–	–	–	2 9/16	2 7/8	3 5/16	4 1/16	4 1/2	5
E	–	–	–	1 7/8	2	2 9/16	2 5/8	2 7/8	3 7/16
Fig 230-70 Wts	–	–	–	.8	1.2	2.0	3.9	6.6	7.0

Principal Parts and Materials

Part	Fig	Material	ASTM
Body & Cap	–	T-1 Bronze	B 62
Disc	–	Teflon	D1457
Disc Holder	–	T-1 Bronze	B62
Spring	231	None	–
	233	Stainless Steel (No. 303)	A313

These valves comply with ANSI B16.24 and MSS-SP-80
*Reg. T.M., E.I. DuPont de Nemours and Co.

LUNKENHEIMER®
THE ONE Great NAME IN VALVES

CINCINNATI VALVE COMPANY
LICENSEE OF LUNKENHEIMER VALVES

P.O. BOX 141451 . CINCINNATI, OH 45250-1451 . U.S.A.
PHONE: 513-471-8258 . FAX: 513-471-8327

Class

200

Lunkenheimer Bronze Check Valves

200 lb SP 550°F
400 lb WOG
Lift check, Ball check, Screw end

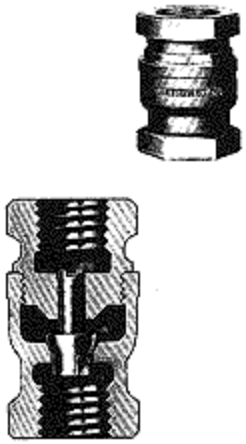

Vertical lift check
Fig 418

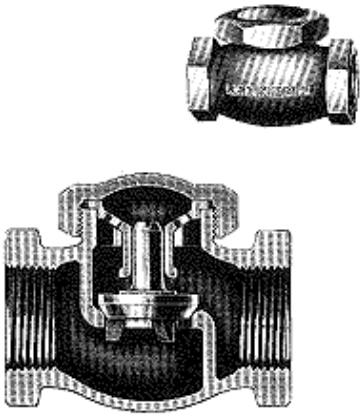

Horizontal check
Fig 414

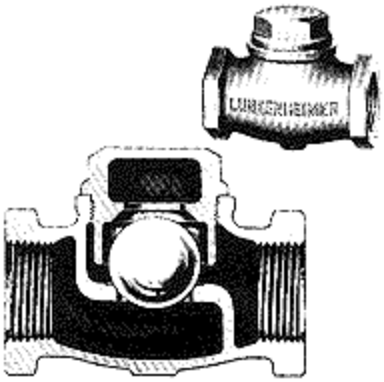

Horizontal ball check
Fig 416

Ruggedly designed for non-return control where pulsating action is present in general service use. Seats are regrindable and discs are regrindable and replaceable. All parts are renewable. Generally used in connection with globe valves because of similarity of flow characteristics.

Discs Renewable, regrindable bronze; precisely guided above and below the seating faces to prevent cocking.

Seats Regrindable, integral seats are machined to precisely fit taper of discs.

Bodies Proportioned for maximum strength, full flow. Large clearances at ends of pipe threads permit tight joints without pipe ends jamming diaphragms, distorting seat, or choking flow. Made of highest quality steam bronze to resist wear and corrosion.

Caps To prevent damage and leakage, the collar does not extend beyond the body neck. Wide flats for firm wrench grip. Strong threads for tight joints.

Installation and maintenance To facilitate removal for inspection or repair, vertical lift valves should be installed near a pipe union. Seating faces can be reground by removing cap and applying screwdriver to slot in stem.
Ball Check Valves are ideal for handling of high viscosity fluids which tend to slow down the operation of other types of check valves.

Balls Stainless steel. Provide multiple seating contacts. Wear is evenly distributed over entire area.

Bodies Large flow area in body minimizes friction resistance. Metal distribution and thickness provide ample safety at maximum rated operating pressures. Large clearances at end of pipe threads permit tight pipe connections without danger of pipe ends jamming against diaphragms, distorting the seat or choking the flow.

Caps Wide flats for firm wrench grip. Strong threads for tight joints.

Seats Integral. Bronze.

Principal Parts and Materials

Part	Fig	Material	ASTM
Body & Cap	All	S-1 Steam Bronze	B 61
Disc	All	S-1 Steam Bronze	B 61

These valves comply with ANSI B16.24 and MSS-SP-80

Principal Parts and Materials

Part	Fig	Material	ASTM
Body & Cap	All	S-1 Steam Bronze	B 61
Ball	All	Type 440 Stainless Steel	
Seat	All	S-1 Steam Bronze	B 61

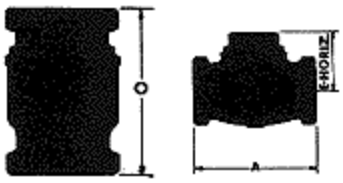

Dimensions in inches Weights in Pounds

Size	1/8	1/4	3/8	1/2	3/4	1	1 1/4	1 1/2	2	2 1/2	3
A	1 19/32	2 1/32	2 1/8	2 7/16	2 15/16	3 11/32	3 7/8	4 5/16	5 1/4	6 7/8	7 3/16
E	13/16	1 1/8	1 1/8	1 5/16	1 5/8	1 3/4	2	2 1/4	2 5/8	3	3 1/2
Fig 414 Wts	.2	.4	.5	.6	1.3	2.0	3.0	4.3	7.1	12.0	17.0
A	–	1 5/8	2 7/32	2 19/32	3 5/32	3 3/4	4 9/32	4 25/32	5 29/32	–	–
E	–	7/8	1 1/16	1 1/4	1 5/8	1 7/8	2 1/8	2 7/16	2 15/16	–	–
Fig 416 Wts	–	.3	.5	.7	1.3	2.2	3.3	4.9	8.7	–	–
O	–	1 15/16	2 2/32	2 5/16	2 5/8	2 31/32	3 5/16	3 11/16	4 5/16	5	5 5/8
Fig 418 Wts	–	.3	.4	.6	.9	1.5	2.1	3.0	5.2	8.2	12.0

LUNKENHEIMER®
THE ONE Great NAME IN VALVES

CINCINNATI VALVE COMPANY
LICENSEE OF LUNKENHEIMER VALVES

P.O. BOX 141451 . CINCINNATI, OH 45250-1451 . U.S.A.
PHONE: 513-471-8258 . FAX: 513-471-8327

Class

300

Lunkenheimer Bronze Check Valves

¼" -2"
300 lb SP 550°F
600 lb WOG
Swing check, Screw end

2 ½" -3"
200 lb SP 550°F
400 lb WOG

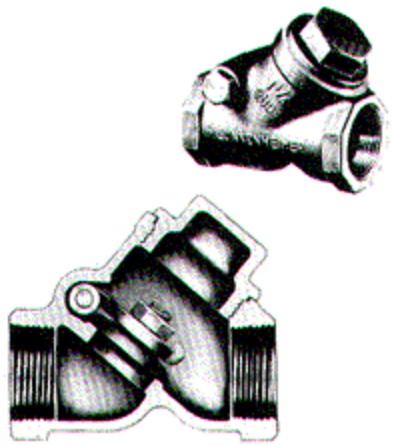

Y-Swing check
Fig 554Y

Ruggedly designed to afford protection against reverse flow in steam, water, oil, gas, and other fluid lines. Discs are renewable and seats may be reground without removing valves from the line. Valves function in either vertical or horizontal position. Slight pressure differential is required to open or close disc.

Discs Renewable. Free acting in any position and swivel on disc carrier for even wear at all points of seating faces.

Side plugs Renewable. Serve as bearings for disc carrier pins, easy to replace.

Seats Regrindable, integral seats can be restored to seat tightness without removing from line.

Bodies Heavy walls for maximum strength. Full flow area is equal to connecting pipe. Large clearances at ends of pipe threads permit tight joints without pipe ends jamming diaphragms, distorting seat, or choking flow.

Caps To prevent damage and leakage, the collar does not extend beyond the body neck. Wide flats for firm wrench grip. Strong threads for tight joints.

Maintenance To regrind seat without removing from line, remove plug in upper part of body and apply screwdriver to slot in top of disc.

Dimensions in inches Weights in Pounds

Size	1/4	3/8	1/2	3/4	1	1 1/4	1 1/2	2	2 1/2	3
A	2 1/8	2 1/8	2 9/16	2 7/8	3 3/16	3 7/8	4 1/4	6 5/16	6 5/8	7 11/16
D	1 9/16	1 9/16	1 11/16	2 1/8	2 3/4	2 7/8	3 1/16	4	4 5/8	5 7/16
Fig 554Y Wts	.6	.7	.9	1.4	2.1	3.2	4.2	7.3	11.5	16.0

Principal Parts and Materials

Part	Fig	Material	ASTM
Body & Cap	All	S-1 Steam Bronze	B 61
Disc	All	S-1 Steam Bronze	B 61

These valves comply with ANSI B16.24 and MSS-SP-80

LUNKENHEIMER®
THE ONE Great NAME IN VALVES

CINCINNATI VALVE COMPANY
LICENSEE OF LUNKENHEIMER VALVES

P.O. BOX 141451 . CINCINNATI, OH 45250-1451 . U.S.A.
PHONE: 513-471-8258 . FAX: 513-471-8327

Class

300

Lunkenheimer Bronze Check Valves

300 lb air pressure
Lift check,
Screw end

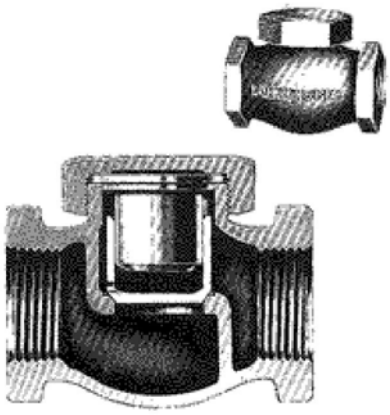

Horizontal lift check
Air compressor valve
Fig 1616

Specially designed for severe operating conditions of air compressor service, but equally suited to many other air and gas line applications where there is frequent and rapid reversal of flow. All parts are renewable and machined to close tolerances.

Discs Renewable stainless steel discs afford maximum resistance to wear in extreme service. Line ofcontact on disc face is narrow for tight closing.

Disc guides Bronze. Prevent cocking. They are sealed to the body with the heavy valve cap. Design provides air-cushioning to reduce pounding.

Bodies Heavy walls for maximum strength and ample safety at maximum pressure rating. Full flow area is equal to connecting pipe. Large clearances at ends of pipe threads permit tight joints without pipe ends jamming diaphragms , distorting seat, or choking flow. Made of highest quality steam bronze for strength and resistance to wear.

Caps Extremely strong, anchoring disc guide in perfect alignment with disc travel. Wide flats for firm range grip. Strong threads for tight joints.

Maintenance To maintain the air-cushioning effect of the disc guide, remove the cap and keep the interior of the disc well-oiled.

Dimensions in inches Weights in Pounds

Size	1/4	3/8	1/2	3/4	1	1 1/4	1 1/2	2
A	2 1/31	2 1/8	2 7/16	2 15/16	2 11/32	3 7/8	4 5/16	5 1/4
E	1 1/16	1 1/16	1 3/16	1 1/2	1 5/8	1 7/8	2 1/16	2 7/16
Fig 1616 Wts	.4	.4	.7	1.4	2.0	3.1	4.8	7.7

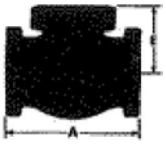

Principal Parts and Materials

Part	Fig	Material	ASTM
Body & Cap	All	S-1 Steam Bronze	B 62
Disc	All	Stainless Steel (No. 303)	A 276
Disc Guide	All	Stemalloy, Rod (C69700)	B 371

These valves comply with ANSI B16.24 and MSS-SP-80

LUNKENHEIMER®
THE ONE Great NAME IN VALVES

CINCINNATI VALVE COMPANY
LICENSEE OF LUNKENHEIMER VALVES

P.O. BOX 141451 . CINCINNATI, OH 45250-1451 . U.S.A.
PHONE: 513-471-8258 . FAX: 513-471-8327

Class

350

Lunkenheimer Bronze Check Valves

350 lb SP 550°F
1000 lb WOG
Lift check, Screw end

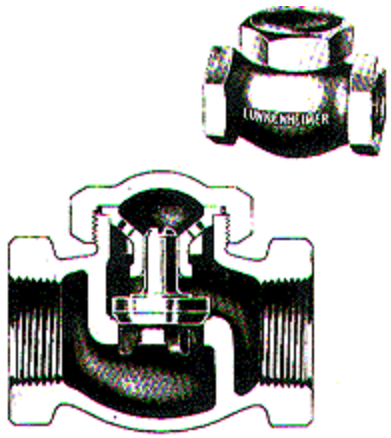

Horizontal lift check
Fig 413

Designed for the non return-control of a wide variety of fluids that donot attack bronze. For use under conditions where pulsating action in line causes excessive wear in swing-type valves. Discs are renewable and regrindable; seats are regrindable. Because of flow characteristics, these valves are generally used in conjunction with globe valves.

Discs Renewable, regrindable bronze discs made of the highest quality steam bronze for excellent performance under high temperatures. Discs are guided above and below seating by disc stem guides and bottom disc guide lugs to prevent cocking.

Seats Regrindable, integral. Precision machined to fit taper of discs accurately. Can be reground without removing from line.

Bodies Proportioned for maximum strength, full flow. Large clearances at ends of pipe threads permit tight joints without pipe ends jamming diaphragms, distorting seat, or choking flow. Made of highest quality steam bronze to resist wear and corrosion.

Caps Screw over body necks; have long, powerful threads for tight connections. Wide flats for firm wrench grip.

Maintenance To regrind seats, remove cap and apply screwdriver to slot in top of disc stem. It is not necessary to remove the valve from the line.

Dimensions in inches Weights in Pounds

Size	1/4	3/8	1/2	3/4	1	1 1/4	1 1/2	2	2 1/2
A	2 1/4	2 7/16	2 23/32	3 3/8	3 3/4	4 9/32	4 7/8	5 7/8	7 1/16
E	1 1/4	1 1/4	1 7/16	1 7/8	2 1/16	2 1/4	2 9/16	2 15/16	3 7/16
Fig 413 Wts	.7	.8	1.0	2.1	3.0	4.4	5.9	11.0	17.5

Principal Parts and Materials

Part	Fig	Material	ASTM
Body & Cap	All	S-1 Steam Bronze	B 61
Disc	All	S-1 Steam Bronze	B 61

These valves comply with ANSI B16.24 and MSS-SP-80

LUNKENHEIMER®
THE ONE Great NAME IN VALVES

CINCINNATI VALVE COMPANY
LICENSEE OF LUNKENHEIMER VALVES

P.O. BOX 141451 . CINCINNATI, OH 45250-1451 . U.S.A.
PHONE: 513-471-8258 . FAX: 513-471-8327

Class

200

Lunkenheimer Needle Valves

200 lb SP 550°F
400 lb WOG
Bronze needle valves, Screw end

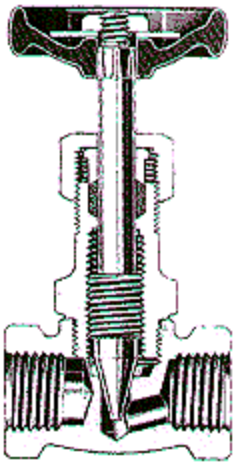

Globe
Bronze stem
Fig 906-BS

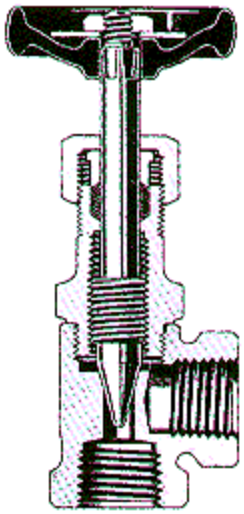

Angle
Bronze stem
Fig 907-BS

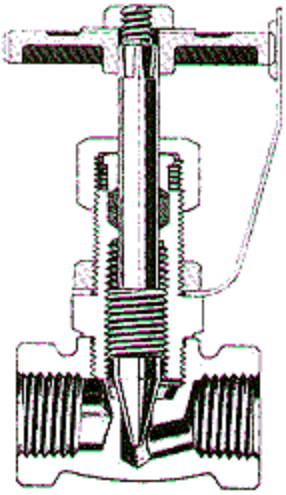

Globe
Bronze stem with
regulating wheel
and indicator
Fig 1565

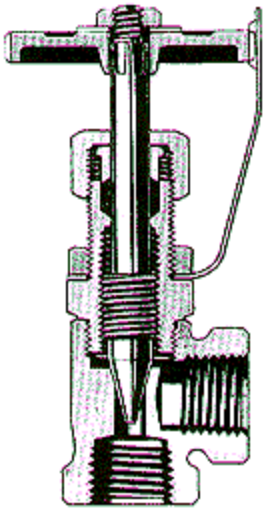

Angle
Bronze stem with
regulating wheel
and indicator
Fig 1566

Designed for fine, accurate regulation of flow to gauges and other delicate instruments. Compact and well suited for installation in close quarters. Globe models are offered with either bronze or steel stem.

Bodies and bonnets Precisely finished to assure accurate alignment of stem/disc and valve seat. Made of the highest quality steam bronze to resist wear and corrosion. Screw -in bonnet design includes large wrench grip.

Discs
Needle valve/stem discs Thread pitch is extremely fine, providing for unusually close regulation.

Bronze stem/discs Available in globe and angle models. Exceptionally resistant to wear, corrosion, and embrittlement.

Seats Integral. Angle of tapered seating face at end of stem is 30°.

Repacking Repackable under pressure when wide open.

Hexagon head gland Permits the use of a light wrench to easily loosen and raise gland. Insures against leakage at the stem.

Handwheels Two types available:
Non-slip design insures tight closing. (Sizes 1/8" and 1/4" do not have cross-bar extension.)

Indicator handwheel has numbered graduation marks which permit resetting the valve to predetermined degree of opening. A spring rachet holds the valve at its setting.

Dimensions in inches Weights in Pounds

Size	1/8	1/4	3/8	1/2	3/4	1
A	1 3/8	1 1/2	1 7/8	2 1/16	2 3/4	3 1/4
C	11/16	3/4	15/16	1 1/32	1 3/8	1 5/8
E and F BS	2 5/8	2 11/16	3 1/2	3 5/8	4 13/16	5 1/16
G	1 1/2	1 1/2	2 1/4	2 1/4	3	3 1/2
H	–	1 1/2	2	2	–	–
K and L	–	2 11/16	3 3/8	3 1/2	–	–
Seat Dia BS	1/8	3/16	1/4	5/16	7/16	9/16
Fig 906 BS, 907 BS Wts	.3	.4	.6	.8	1.6	2.3
Fig 1565, 1566 Wts	–	.6	.7	.9	<- Fig 1565 ONLY	

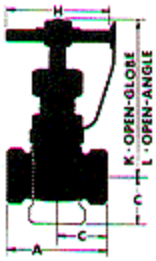

Principal Parts and Materials

Part	Fig	Material	ASTM
Body & Bonnet	All	S-1 Steam Bronze	B 61
Disc and Stem	906 BS, 1565, 1566, 907 BS	Stemalloy, Rod (C69700)	B371
Packing	All	JC 168 Kevlar	–

These valves comply with ANSI B16.24 and MSS-SP-80

LUNKENHEIMER®
THE ONE Great NAME IN VALVES

CINCINNATI VALVE COMPANY
LICENSEE OF LUNKENHEIMER VALVES

P.O. BOX 141451 . CINCINNATI, OH 45250-1451 . U.S.A.
PHONE: 513-471-8258 . FAX: 513-471-8327

WOG

10,000 Lunkenheimer Needle Valves

¼" & ½": 10,000 PSI WOG at 200°F
¾" & 1": 6,000 PSI WOG at 200°F
Bar stock needle valves
Screw end

Globe
Carbon steel
Fig 1728

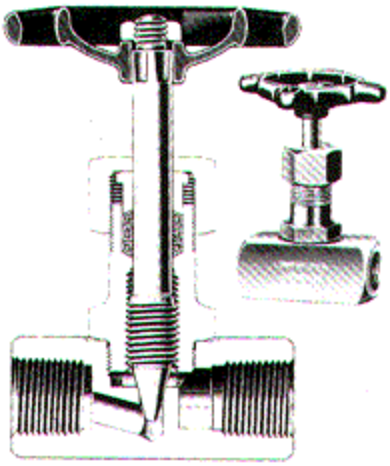

Globe
Stainless steel 18-8 Mo (Type 316)
Fig 1732

For orifice meters, gauges, by-passes, instrument lines and other small high-pressure gas and liquid lines where fine regulation of flow is required. Compact, extremely rugged design. Available in different steel types for the control of a variety of corrosive materials.

Bodies Heavy and compact. Extra long pipe threads provide ample clearance over end of pipe to prevent jamming against back wall and choking port. *Carbon steel* Recommended for dry natural or artificial gasses, low-sulfur oil compounds and other liquids and gasses that do not attack carbon steel. Carbon steel parts are given full phosphate treatment for greater corrosion resistance. *18-8 Mo (type 316) stainless steel*. More resistant to chlorides and organic acids than the usual 18-8 Stainless steels.

Stem Thread pitch is extremely fine, providing for close regulation. Large diameter gives extra strength.

Seats Integral.

Size	1/4	1/2	3/4	1
A	2 7/8	2 7/8	4 1/4	4 1/4
E	4	4	5 7/8	5 7/8
G	2 3/4	2 3/4	4 1/4	4 1/4
Orifice	1/4	1/4	7/16	7/16
CV	.7	.7	2.3	2.3
Fig 1728 & 1732 Wts	1.65	1.65	6.0	6.0

Principal Parts and Materials

Part	Fig	Material	ASTM
Body & Gland	1728 1732	Carbon Steel 316 St. St.	A 108 AISI316
Stem	1728 1732	303 St. St. 316 St. St.	
Packing	1728 1732	¼" & ½" Buna-N O-Ring Stem Seal ¾" & 1" Virgin Teflon Stem Packing	

LUNKENHEIMER®
THE ONE Great NAME IN VALVES

CINCINNATI VALVE COMPANY
LICENSEE OF LUNKENHEIMER VALVES

P.O. BOX 141451 . CINCINNATI, OH 45250-1451 . U.S.A.
PHONE: 513-471-8258 . FAX: 513-471-8327

Class

125-150 Lunkenheimer Iron Gate Valves

175 lb WOG, 150 lb SP 450 F (¼" – 2")
225 lb WOG, U-Clamp, Screw end

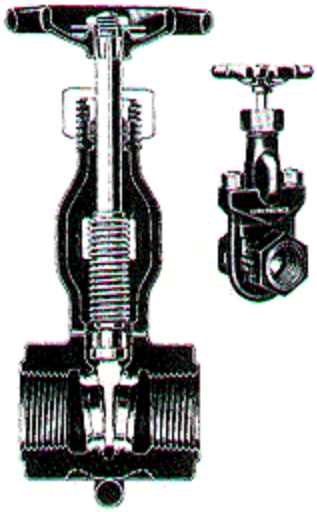

Rising stem
Screw end
Fig 1644 iron

These small to medium sized "King-Clip" U-clamp valves are rugged and exceptionally rigid, with flanged ends. Easily disassembled by removing the two U-bolt nuts. All-iron. Solid wedge discs are thin and sharply tapered to handle even heavy fluids.

Body to bonnet Close-grained, corrosion-resistant cast iron. Oval-shaped body -to-bonnet joints maintain uniform gasket-bearing pressure, reduce stress on U-bolts.

Bonnet drain channels Permit free passage of fluids that clog or congeal. Prevents freezing at low temperatures.

Trim for all-iron valves (Fig1644)
Bushings Iron. Integral with bonnet.
Stems Phosphate-treated steel to inhibit rust. Threads are coarse and loose-fitting to prevent seizing.
Discs Forged steel in sizes up to 1½", and malleable iron in larger sizes.

Seats Tabular steel in sizes up to 2" and expanded securely in body to assure tight fit.

Repacking Back seats permit repacking under pressure when disc is wide open. Large stuffing boxes.

Handwheels Non-slip. Assure tight closure.

Dimensions in inches Weights in Pounds

Size	¼	3/8	½	¾	1	1¼	1½	2	2½	3	4
A	–	–	2¼	2 5/8	2 15/16	–	3 7/16	4 1/16	–	–	–
E	–	–	5 9/16	6 13/16	7 15/16	–	10 5/16	12¾	–	–	–
G	–	–	2½	3	3½	–	4 5/8	5 1/8	–	–	–
Fig 1644 Wts	–	–	1.9	2.9	4.0	–	7.9	12.0	–	–	–

Principal Parts and Materials

Part	Material	ASTM
Body & Bonnet	Cast Iron	A-126
Bushing	Integral	
Disc	Iron Malleable Iron Forged Steel	A-126 A-47 A-235
Stem	Steel	A-108
Seat Ring	Integral, Tubular	B-16 A-126 A-519
Packing	JC 168 Kevlar	
Gasket	Non-Asbestos Sheet	

LUNKENHEIMER®
THE ONE Great NAME IN VALVES

CINCINNATI VALVE COMPANY
LICENSEE OF LUNKENHEIMER VALVES

P.O. BOX 141451 . CINCINNATI, OH 45250-1451 . U.S.A.
PHONE: 513-471-8258 . FAX: 513-471-8327

Class

125

Lunkenheimer Iron Gate Valves

125 lb SP 450°F
200 lb WOG
Bolted bonnet, Flanged end

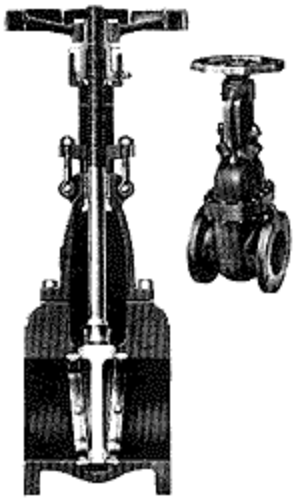

Outside screw and yoke
Flanged end
Fig 1430 IBBM

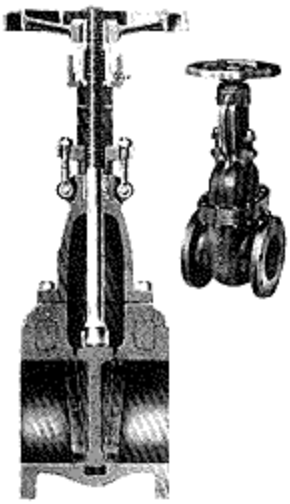

Outside screw and yoke
Flanged end
Fig 1578 iron
Fig 1578N-4 MO stainless trim

This series of bolted bonnet gate valves are outside screw and yoke type with flanged ends. Two body-trim combinations: All-iron or iron body with bronze mountings (IBBM), the latter recommended for general use on steam, water, air, oil, and gas lines.

Body and bonnet Close-grained cast iron or a corrosive-resistant 3% nickel iron alloy. Bolted bonnets. Flanged ends make valves easy to install or remove in general use or corrosive service. Two supporting webs between pipe flanges and body flange help strengthen valve against pipe line strain.

Stem Outside screw and yoke design places stem outside bonnet away from corrosive fluids. Acme standard threads with long engagement in yoke bushing.
For all-iron-valves Steel. Chemically treated with phosphate to inhibit rust.
For IBBM valves Manganese bronze in 2"-12" sizes, "Stemalloy" in larger sizes. Resistant to wear, corrosion, embrittlement.

Discs Solid wedge design will not distort with temperature variations.
For all-iron valves Iron, solid wedge.
For IBBM valves Solid bronze in 2" and 2 ½" size. Iron with bronze faces in 3" and larger sizes.

Seats seat rings heavily constructed and rectangular in section, renewable if needed. Seat face inner rings seat against solid walls of body recess.
For iron valves Screw in, iron seat rings.
For IBBM valves Screw in bronze seat rings.

Repacking Swing gland bolts and shelves facilitate repacking. Large stuffing boxes; repackable under pressure when wide open.

Flanges Conform to American Standard Face to Face Dimensions, Ferrous Flanged Valves (ANSI B16.10-1973) for 125 lb Cast Iron Wedge Gate Valves. Dimensions, drilling and facing of flanges conform to American Cast Iron Flange Standard, Class 125 (ANSI B-16.1-1967). Have plain face with smooth finish.

Principal Parts and Materials

Part	Fig/Sizes	Material	ASTM
Body & Bonnet	1430	Cast Iron	A-126
	1578	Cast Iron	A-126
	1578N-4	3% Nickel Iron	–
Disc	1430	Bronze	
	1578	Cast Iron	A-126
	1578N-4	Stainless Steel	A-351-A-182 A-371
Stem	1430<12"	Manganese Bronze	B-147 B138
	1430>12"	Stemalloy - C69700	B371
	1578	Steel	A108 Gr
	1578N-4	Stainless Steel 316	B1112 A-276
Seat Ring	1430	Bronze	B-62
	1578	Cast Iron	A-126
	1578N-4	Stainless Steel 316	A182 A351
Packing	1430	Non-Asbestos Braided Fiber	–
	1578	Non-Asbestos Braided Fiber	–
	1578N-4	Non-Asbestos Braided Fiber	–
Gasket	All	Non-Asbestos Sheet	–

These valves comply with ANSI B-16.1 and B-16.10.

Dimensions in inches Weights in Pounds

Size	2	2½	3	4	5	6	8	10	12	14	16	18	20	24
B	7	7½	8	9	10	10½	11½	13	14	15	16	17	18	20
F	$15^{1}/_{8}$	$16^{9}/_{16}$	$18^{15}/_{16}$	23¾	$27^{15}/_{16}$	32½	$40^{7}/_{8}$	$49^{3}/_{8}$	$57^{5}/_{8}$					
H	8	8	8	10	12	12	14	16	18	20	24	26	28	30
Fig 1430 Wts	35.0	48.0	58.0	100.0	142.0	192.0	310.0	465.0	682.0	898.0	1213.0	1587.0	2018.0	3149.0
Fig 1578 Wts	35.0	47.0	57.0	100.0	145.0	191.0	310.0	462.0	678.0	886.0	1206.0	–	–	–

LUNKENHEIMER®
THE ONE Great NAME IN VALVES

CINCINNATI VALVE COMPANY
LICENSEE OF LUNKENHEIMER VALVES

P.O. BOX 141451 . CINCINNATI, OH 45250-1451 . U.S.A.
PHONE: 513-471-8258 . FAX: 513-471-8327

Class

125

Lunkenheimer Iron Gate Valves

125 lb SP 450°F
200 lb WOG
Bolted bonnet, Flanged end

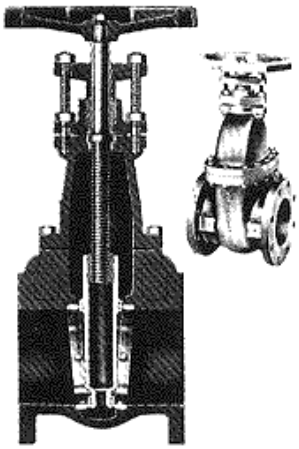

Non-rising stem
Flanged end
Fig 1428 IBBM

Non-rising stem design for use in cramped spaces, with minimal headroom. Iron body with bronze mountings (IBBM) recommended for general use on steam, water, air, oil, and gas lines.

Bodies and bonnets Close-grained cast iron. Flanged end valves are easy to install or remove in corrosive service. Two supporting webs between pipe flanges and body flange help strengthen valve against pipe line strain.

Stems Non-rising design. Acme standard threads with long engagement in yoke bushing.

For IBBM valves Leaded manganese bronze. Exceptionally resistant to wear and corrosion.

Discs Solid wedge design will not distort with temperature variations.

For IBBM valves Solid bronze in 2, 2½, and 3."½" size; iron with bronze faces in larger sizes. 4" and large sizes have bronze, press-on seat rings mounted to cast iron disc.

Seats Renewable.

Repacking Swing gland bolts and shelves facilitate repacking. Large stuffing boxes; repackable under pressure when disc is wide open

Flanges Conform to American Standard Face to Face Dimensions, Ferrous Flanged Valves (ANSI B16.10-1973) for 125 lb Cast Iron Wedge Gate Valves. Dimensions, drilling and facing of flanges conform to American Cast Iron Flange Standard, Class 125 (ANSI B-16.1-1975). Have plain face with smooth finish.

Principal Parts and Materials

Part	Fig/Sizes	Material	ASTM
Body & Bonnet	All	Cast Iron	A-126
Disc	=< 3"	Bronze	B-62
	1428, >4"	Iron with bronze face	A-126 B-62
	1428,		
Stem	1428,	Manganese Bronze	B-147 Alloy 7A
Seat Ring	1428,	Bronze	B-62
Packing	All	Non-Asbestos Braided Fiber	
Gasket	All	Non-Asbestos Sheet	

*Reg. T.M., E. I. DuPont de Nemours and Co.

Dimensions in inches Weights in Pounds

Size	2	2½	3	4	5	6	8	10	12
B	7	7½	8	9	10	10½	11½	13	14
E	$10^{7}/_{8}$	12	$13^{15}/_{16}$	$16^{13}/_{16}$	19	20½	25½	$29^{5}/_{8}$	$33^{15}/_{16}$
H	6	7	8	10	12	12	14	16	18
Fig 1428 Wts	31.1	44.0	55.0	94.0	129.0	175.0	291.0	434.0	653.0

These valves comply with ANSI B-16.1 & B-16.10

LUNKENHEIMER®
THE ONE Great NAME IN VALVES

CINCINNATI VALVE COMPANY
LICENSEE OF LUNKENHEIMER VALVES

P.O. BOX 141451 . CINCINNATI, OH 45250-1451 . U.S.A.
PHONE: 513-471-8258 . FAX: 513-471-8327

Class

250

Lunkenheimer Iron Gate Valves

250 lb SP 450°F
500 lb WOG
Bolted bonnet/outside screw and yoke
Flanged end

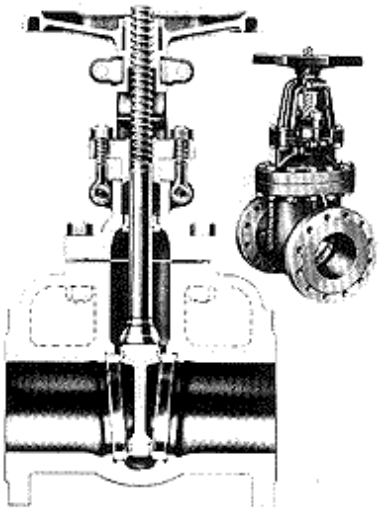

Outside screw and yoke
Flanged end
Fig 1436 IBBM

Designed for dependable performance on high pressure steam, water, gas, and oil lines Bronze mounted (IBBM) to handle fluids for above service. Bodies 6" and larger may be used with by-passes and drains.

Bodies and bonnets Close-grained cast iron. Bolted bonnets. Flanged and screw ends. Bronze trim (IBBM) for dependable service on steam, water, gas, and oil lines. Two supporting webs between pipe flanges and body flange help strengthen valve against pipe line strain. Bodies of 6" and larger have bosses for by-pass and drain connections.

Stems Stemalloy with Acme standard threads. Outside screw and yoke design keeps threads outside body where they do not come in contact with corrosive fluids.

Discs Cast iron with bronze facing rings in 8" and larger sizes; all others solid bronze. Guide channels in disc are accurately machined and guide ribs in body are precisely cast, reducing wear.

Seats Renewable. Bronze, heavily constructed and rectangular in section. Seat ring inner faces seat against solid walls of body recess.

Repacking Large stuffing boxes; repackable under pressure when disc is wide open.

Flanges Flanged valves conform to American Standard Face to Face Dimensions, Ferrous Flanged Valves (ANSI B16.10-1973) for 250 lb Cast Iron Wedge Gate Valves. Dimensions, drilling, and facing of flanges conform to American Cast Iron Flange Standard, Class 250 (ANSI B16.1-1975). Flanges save 1/16" raised face. Shipped with flanges drilled unless otherwise specified.

Principal Parts and Materials

Part	Fig/Sizes	Material	ASTM
Body & Bonnet	All	Cast Iron	A-126
Disc	<6" >8"	Bronze Cast Iron with bronze facing	B-61 A-126 & B-61
Stem	All	Stemalloy	B-371 Alloy C69700
Seat Ring	All	Bronze	B-61
Packing	All	Non-Asbestos Braided Fiber	–
Gasket	All	Non-Asbestos Sheet	–

These valves comply with ANSI B16.1, B16.10, B2.1.

Dimensions in inches Weights in Pounds

Size	2	2½	3	4	5	6	8	10	12
A	6	$6^{5}/_{8}$	7¼	$8^{9}/_{16}$	–	–	–	–	–
B	8½	9½	$11^{1}/_{8}$	12	15	$15^{7}/_{8}$	16½	18	19¾
F	$15^{3}/_{16}$	$17^{11}/_{16}$	$19^{3}/_{16}$	23½	$27^{11}/_{16}$	32¼	$39^{5}/_{16}$	47½	$55^{3}/_{8}$
H	8	9	9	12	14	16	18	20	22
Fig 1436 Wts	57.0	80.0	103.0	174.0	262.0	359.0	558.0	827.0	1163.0

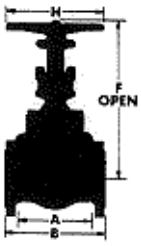

LUNKENHEIMER®
THE ONE Great NAME IN VALVES

CINCINNATI VALVE COMPANY
LICENSEE OF LUNKENHEIMER VALVES

P.O. BOX 141451 . CINCINNATI, OH 45250-1451 . U.S.A.
PHONE: 513-471-8258 . FAX: 513-471-8327

Class

125

Lunkenheimer Iron Globe Valves

125 lb SP 450°F
200 lb WOG
Bolted bonnet, Flanged end

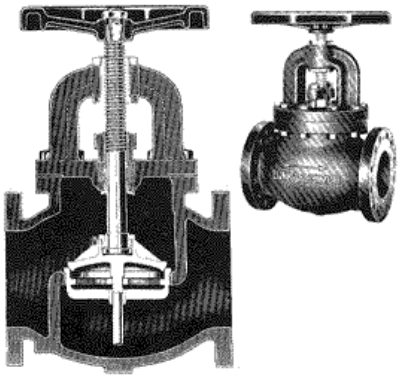

Globe
guided disc
Fig 1123 IBBM

These IBBM valves are designed for dependable performance on steam, water, gas and oil lines where quick shut-off, control or regulation of flow is required. Bronze trim to handle fluids corrosive to iron. Seats are regrindable; discs and seats are renewable, without removing valves from the line.

Bodies and bonnets Close grained cast iron. Flanged ends make valves easy to install or remove in corrosive service.

Stems Stemalloy silicon bronze is extremely resistant to corrosion and embrittlement. Stem scoring and corrosion eliminated because stem never contacts iron.

Discs Solid bronze in 6" and smaller sizes; cast iron with bronze fac ing in larger sizes.

Lower guide on disc fits into bridge of seat ring for accurate alignment assuring a sure, tight fit.

Seats Bronze, Renewable and regrindable. Hole in bridge to accommodate guide on disc, assuring a tight seal.

Repacking Large stuffing box. Repackable under pressure when disc is wide open. Bronze backseat bushings for non-corrosive bearing contacts.

Flanges Flanged valves conform to American Standard Face to Face Dimensions, Ferrous Flanged Valves (ANSI B16.10-1973) for 125 lb Cast Iron Globe and Angle Valves. Dimensions, drilling, and facing of flanges conform to American Cast Iron Flange Standard, Class 125 (ANSI B16.1-1975).

Principal Parts and Materials

Part	Fig/Sizes	Material	ASTM
Body & Bonnet	All	Cast Iron	A-126
Disc	<6" >6"	Bronze Cast Iron with Bronze facing	B-62 A-126 & B-62
Stem	All	Stemalloy	B584 C87400
Seat Ring	All	Bronze	B-62
Packing	All	Non-Asbestos Braided Fiber	–
Gasket	All	Non-Asbestos Sheet	–

These valves comply with ANSI B16.1 and B16.10.

Dimensions in inches Weights in Pounds

Size	2	$2^1/_2$	3	4	5	6	8	10
A	8	$8^1/_2$	$9^1/_2$	$11^1/_2$	13	14	$19^1/_2$	$24^1/_4$
E	$10^1/_2$	$12^1/_{16}$	$13^3/_{16}$	$15^5/_8$	$17^9/_{16}$	$19^{15}/_{16}$	$23^3/_4$	$27^3/_4$
H	6	7	8	10	12	14	18	20
Fig 1123 Wts	32.0	45.0	60.0	101.0	142.0	189.0	356.0	575.0

LUNKENHEIMER®
THE ONE Great NAME IN VALVES

CINCINNATI VALVE COMPANY
LICENSEE OF LUNKENHEIMER VALVES

P.O. BOX 141451 . CINCINNATI, OH 45250-1451 . U.S.A.
PHONE: 513-471-8258 . FAX: 513-471-8327

Class

125

Lunkenheimer Iron Check Valves

125 lb SP 450°F
200 lb WOG
Bolted cap, Swing check, Flanged end

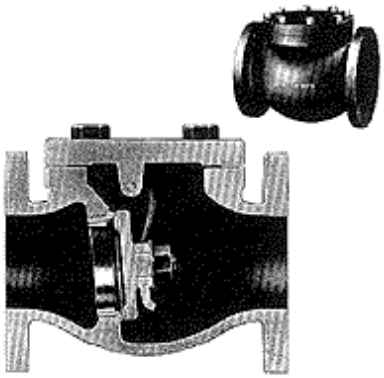

Swing check
Flanged end
Fig 1790 IBBM

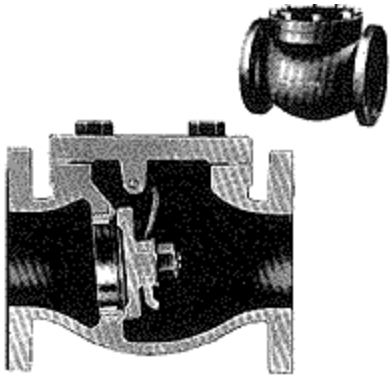

Swing check
Flanged end
Fig 1792 iron

Design provides full flow with minimum pressure loss and permits free action of the disc. Valves may be used in either horizontal or vertical lines. Two body-trim combinations: All-iron or IBBM. Bronze mounted (IBBM) models are recommended for use with oil, steam, water, air, gas, and other fluids that do not attack bronze. All-iron valves are for use with fluids which attack bronze but not iron.

Bodies and caps Close grained cast iron. Flanged or screw ends.

Trim for IBBM valves:
Discs and seat rings Solid bronze discs for 2" - 4"; iron with bronze facings on 5" and larger sizes.
Disc carrier pins Silicon bronze. Renewable.
Seat rings Solid bronze Regrindable seating surfaces.

Trim for all-iron valves:
Discs and seat rings Cast iron. Renewable.
Disc carrier pins Steel. Renewable.

Flanges Valves conform to American Standard Face to Face Dimensions, Ferrous Flanged Valves (ANSI B16.10-1973) for 125 lb Cast Iron Swing Check Valves. Dimensions, drilling and facing of flanges conform to American Cast Iron Flange Standard, Class 125 (ANSI B16.1-1975). Valves are interchangeable, size for size, with all other standard makes of swing check valves.

Principal Parts and Materials

Part	Fig/Sizes	Material	ASTM
Body & Bonnet	All	Cast Iron	A-126
Disc	1790 < 4	Bronze	B-61
	1790 > 5	Iron with Bronze facing ring	A-126 & B-61
	1792	Cast Iron	A-126
	1790	Silicon Bronze	B-371 Alloy 69700
	1792	Steel	A-108 Grade 1018 & 1020
Gasket	All	Compressed Asbestos	–

These valves comply with ANSI B16.1 and B2.1.

Fig 1572 N-4

Designed for use in oil, pulp and paper, wood treating process industries where line material is corrosive to trim on iron or IBBM valves. Bodies are nickel iron, and trim is stainless steel. Can be used either vertically or horizontally.

Bodies and caps Corrosion-resistant 3% nickel iron alloy.
Discs 4" is corrosion-resistant 18-8 MO. All others 3% nickel iron with stainless steel face rings. Renewable.

Discs carriers Corrosion-resistant 18-8 MO (Type 316) stainless steel. Renewable.

Seat rings Corrosion-resistant 18-8 MO (Type 316) stainless steel. Renewable.

Principal Parts and Materials

Part	Fig/Sizes	Material	ASTM
Body & Bonnet	All	3% Nickel Iron	–
Disc	1572N < 4	18-8 MO stainless steel	A-351 Grade CF87
	1572N > 5	3% Nickel Iron	A-182
		18.8 MO stainless steel	Grade F316
Disc Carrier	All	18-8 MO stainless steel	A351 Grade CF8M
Seat Ring	All	18-8 MO stainless steel	A351 Grade CF8M
Gasket	All	Non-Asbestos Sheet	–

These valves comply with ANSI B16.24 and MSS-SP-80

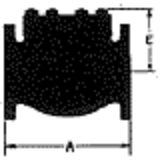

Dimensions in inches Weights in Pounds

Size	2	$2^1/_2$	3	4	5	6	8	10	12	14
A	8	$8^1/_2$	$9^1/_2$	$11^1/_2$	13	14	–	–	–	–
E	$5^3/_{16}$	$4^5/_{16}$	$6^3/_4$	$8^3/_{16}$	$8^{15}/_{16}$	$9^5/_8$	$11^7/_8$	$13^3/_{16}$	$15^1/_{16}$	–
Fig 1790 Wts	30.0	44.0	57.0	95.0	123.0	165.0	324.0	487.0	673.0	–
Fig 1792 Wts	30.0	43.0	57.0	97.0	–	–	–	–	–	–
A	8	$8^1/_2$	$9^1/_2$	$11^1/_2$	13	14	$19^1/_2$	$24^1/_2$	$27^1/_2$	31
E	$3^{13}/_{16}$	$4^3/_{32}$	$4^1/_2$	$5^5/_{16}$	$6^5/_{16}$	$6^{27}/_{32}$	$8^{15}/_{16}$	$10^9/_{32}$	$11^{15}/_{16}$	$13^{13}/_{16}$
Fig 1572-N4 Wts	24	35	43	76	108	133	254	463	713	935

LUNKENHEIMER®
THE ONE Great NAME IN VALVES

CINCINNATI VALVE COMPANY
LICENSEE OF LUNKENHEIMER VALVES

P.O. BOX 141451 . CINCINNATI, OH 45250-1451 . U.S.A.
PHONE: 513-471-8258 . FAX: 513-471-8327

Bronze and Iron Valve Rating Chart

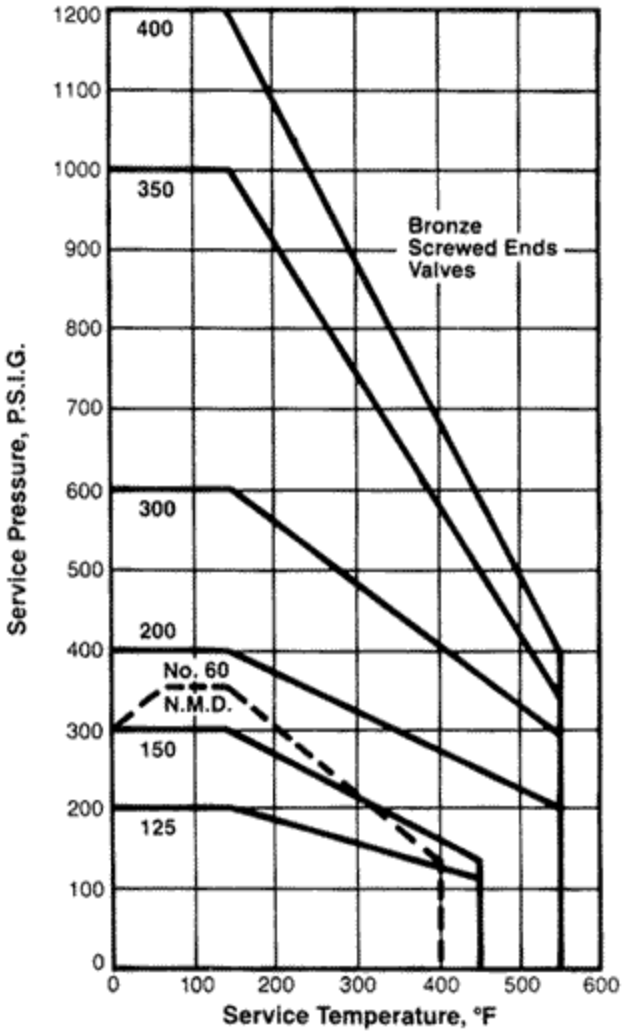

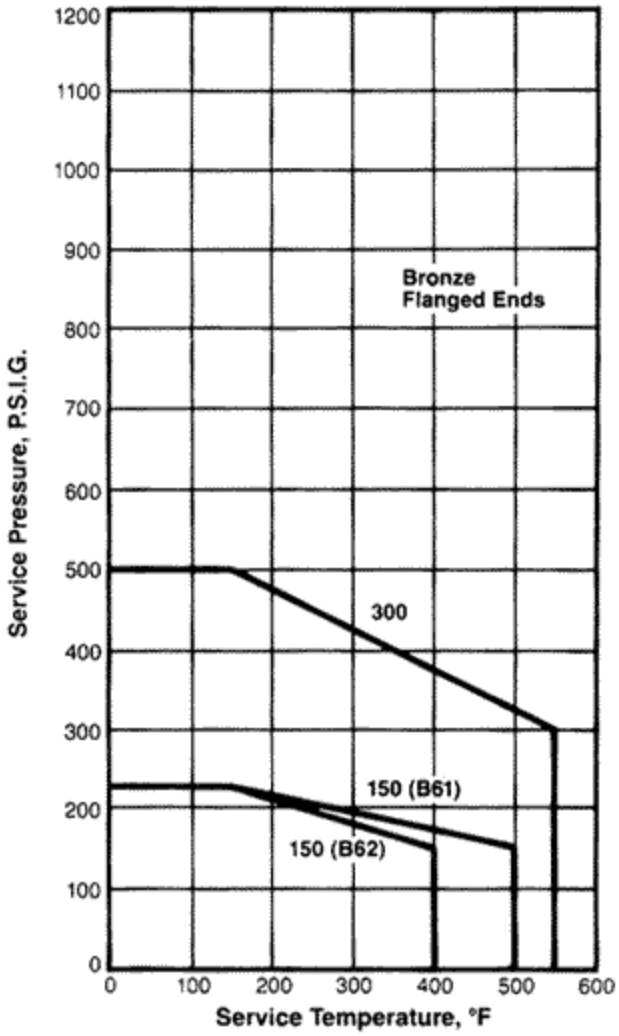

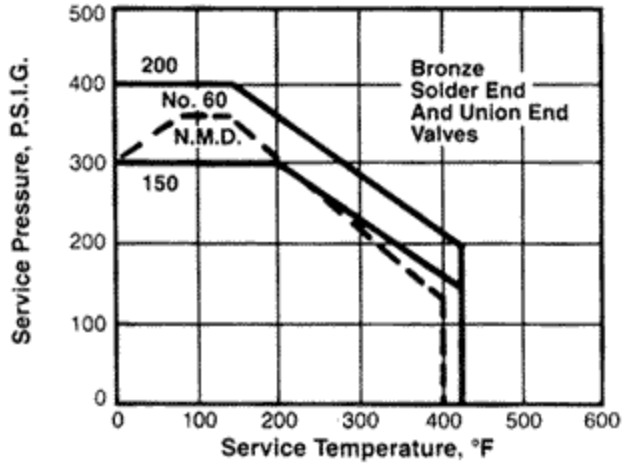

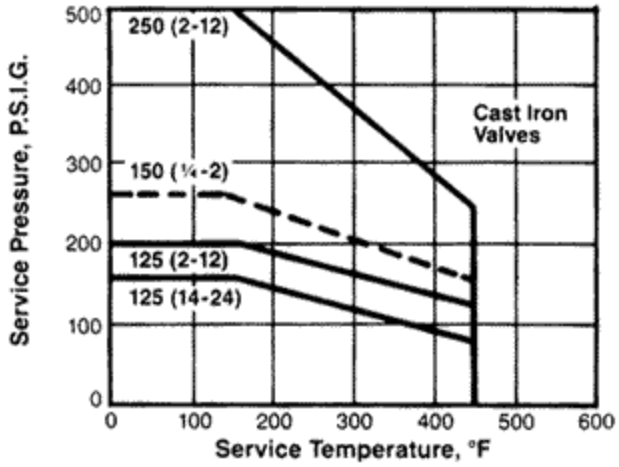

LUNKENHEIMER®
THE ONE Great NAME IN VALVES

CINCINNATI VALVE COMPANY
LICENSEE OF LUNKENHEIMER VALVES

P.O. BOX 141451 . CINCINNATI, OH 45250-1451 . U.S.A.
PHONE: 513-471-8258 . FAX: 513-471-8327

Parts Identification

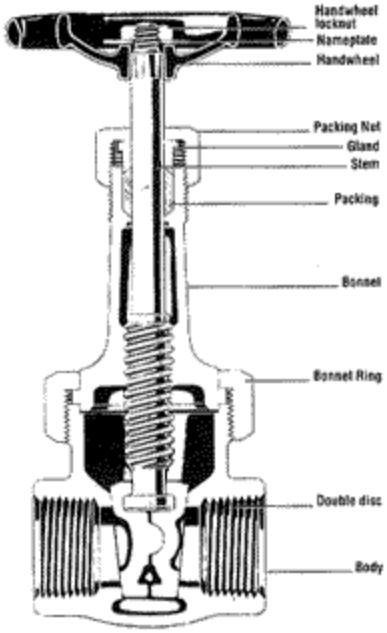

RISING STEM UNI-BALL

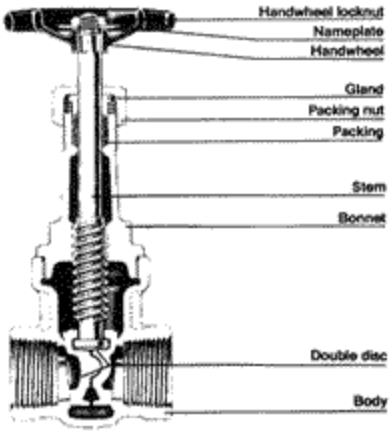

RISING STEM UNI-BALL

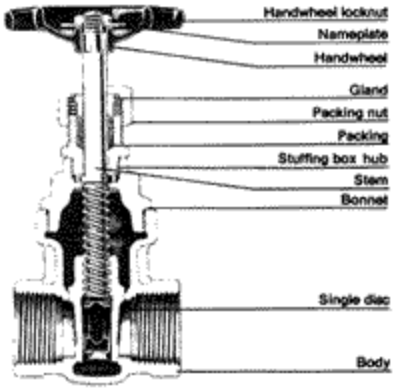

NON-RISING STEM SINGLE WEDGE DISC

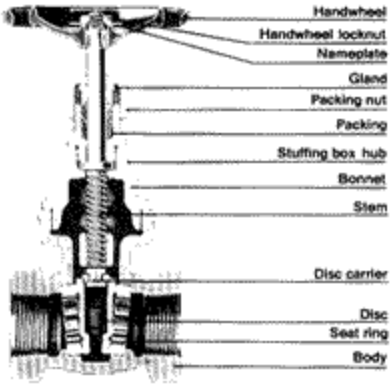

NON-RISING STEM SINGLE WEDGE DISC
RENEWABLE SEAT RINGS

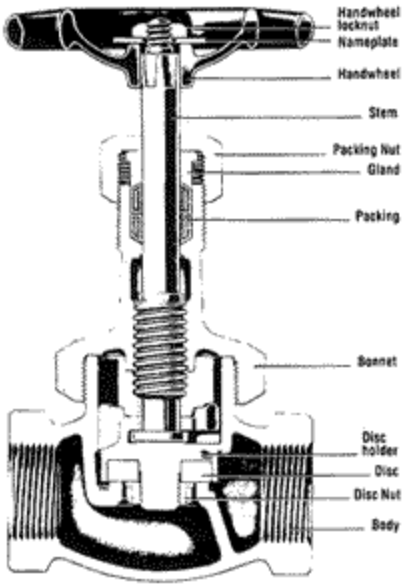

NON-METALLIC DISC GLOBE

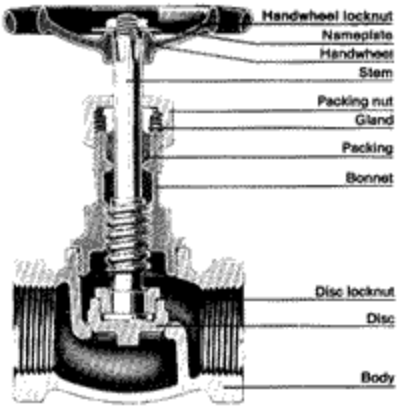

SCREW-IN BONNET GLOBE

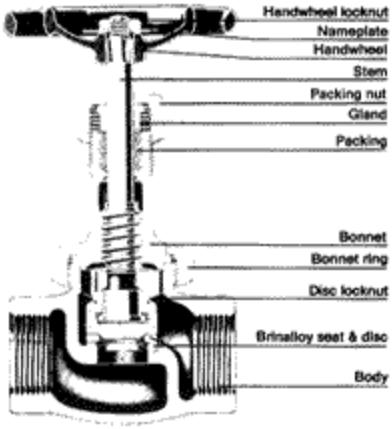

GLOBE

LUNKENHEIMER®
THE ONE Great NAME IN VALVES

CINCINNATI VALVE COMPANY
LICENSEE OF LUNKENHEIMER VALVES

P.O. BOX 141451 . CINCINNATI, OH 45250-1451 . U.S.A.
PHONE: 513-471-8258 . FAX: 513-471-8327

Parts Identification

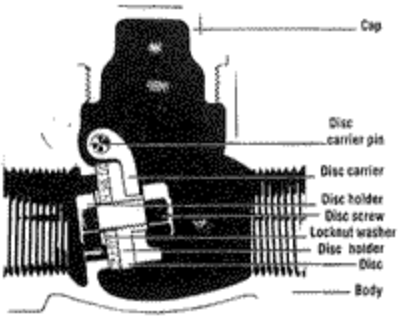

SWING CHECK

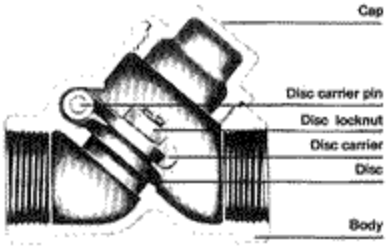

SWING CHECK
REGRINDING SEAL

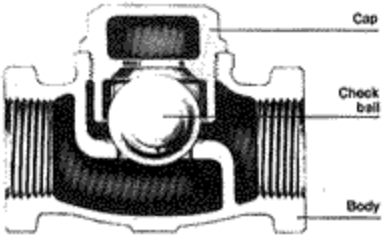

BALL CHECK

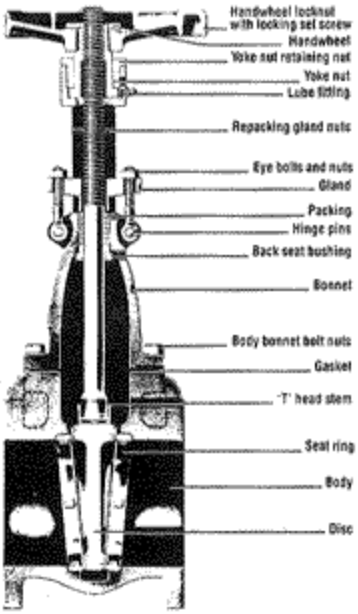

RISING STEM
OUTSIDE SCREW AND YOKE

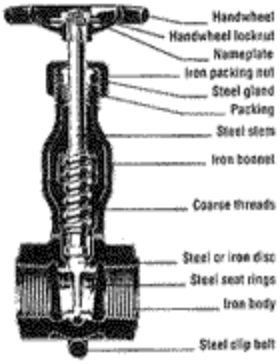

RISING STEM ALL-IRON

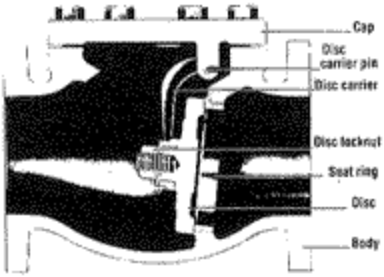

SWING CHECK
RENEWABLE SEAT AND DISC

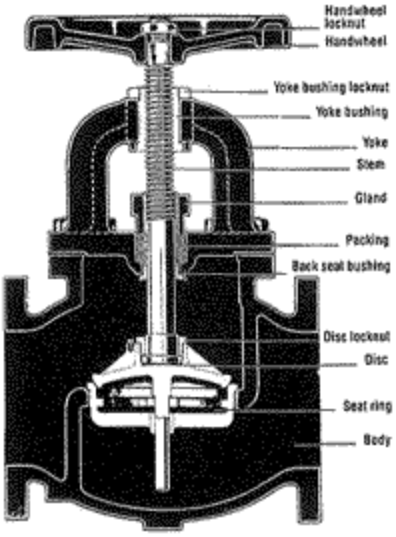

GLOBE VALVE
OUTSIDE SCREW AND YOKE
RENEWABLE SEAT AND DISC

CINCINNATI VALVE COMPANY
LICENSEE OF LUNKENHEIMER VALVES

P.O. BOX 141451 . CINCINNATI, OH 45250-1451 . U.S.A.
PHONE: 513-471-8258 . FAX: 513-471-8327

OTHER LUNKENHEIMER PRODUCTS

Your Lunkenheimer Distributor is:

CINCINNATI VALVE COMPANY
LICENSEE OF LUNKENHEIMER VALVES

P.O.BOX 141451 CINCINNATI, OH 45250-1451 U.S.A.
PHONE: 513-471-8258 FAX: 513-471-8327

SUBJECT TO CHANGE WITHOUT NOTICE
PN B&I-1195